LIGHT VERTICAL MILLING MACHINE

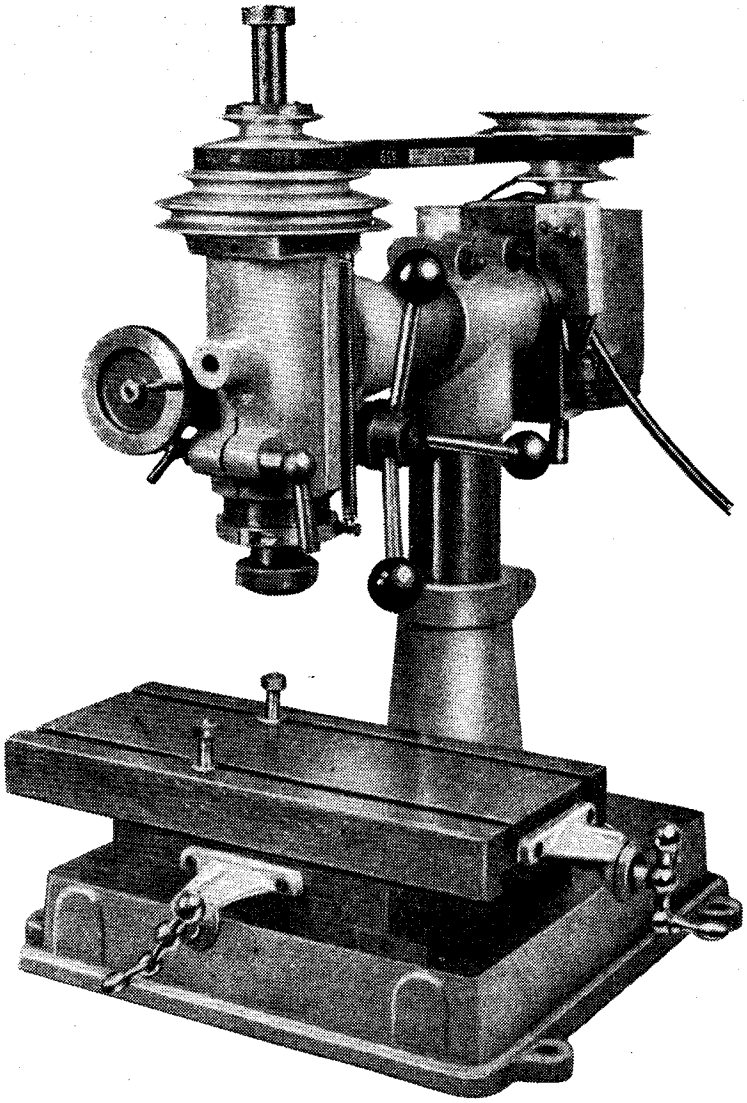

Edgar T. Westbury introduces a project to which he has given attention over a period of three years. It can be built from the pull-out drawings in this issue

LIKE many model engineers, I like to improve my equipment. The milling machine illustrated here has occupied me for periods over three years. It is still in the experimental stage, but the results which I have obtained should make it of interest to others.

Generally speaking, the construction of complete machine tools is regarded as a very ambitious venture. If they are to be large enough to be of practical use, they are often beyond our machining capacity. Nevertheless, several fine examples of machine tools, including lathes, drilling machines, and grinders, have been designed and made by model engineers, usually with some outside assistance in the heavier machining operations.

While the value of lathe attachments is beyond question, nearly every model engineer at some time or other is faced with operations for which even the best of these devices are barely adequate, if adequate at all. In any event, a machine designed for its particular job will obviously have advantages over attachments which need to be specially set up and are often no more than an improvisation. Apart from drilling machines, several of which have been described in ME, the most useful and versatile machine to supplement the lathe in a small workshop is some form of milling device. This statement may perhaps be contested by readers who uphold the rival merits of shaping or planing machines. A great deal of course depends on the kind of work likely to be encountered. For operations involving purely straight-line motion of the cutting tools, shaping and planing machines have claims to superiority; but on the whole, machines which employ rotary cutting tools are the more versatile and efficient.

I made the decision to build a small milling machine after carefully considering all the problems, work involved in relation to the advantages likely to be obtained, and whether sufficient use would be made of it to justify its existence. The cost of building the machine, compared with that of any ready-made one, new or second-hand, was another point to be taken into account. But there is not a very wide choice in small milling machines; most of the new ones cost more than the amateur can afford, and second-hand bargains are few.

Some of the many types of milling machine are designed for specialised work such as die-sinking, gearcutting and keyseating. For general engineering, the main choice rests between two, those with horizontal and vertical spindles. Either will deal with a wide range of work, but has its own

limitations. For many years the horizontal was the more popular, but in modern practice, machines with vertical or angular spindles are increasingly employed. Some designs in which the angle of the spindle can be varied in one or more planes have been loosely described as "universal" milling machines; according to the standard text-books, this vastly overworked adjective is properly applicable only to horizontal millers equipped with a swivelling table geared for cutting spirals of various pitch or lead angles. But there is no doubt that a facility for varying the spindle angle increases the versatility of the machine.

There have been no new basic principles in the design of machine tools since the days of Holtzapffel, who defined almost every possible method of shaping material, or "mechanical manipulation" as he called it, well over a hundred years ago. Modern tools follow the same principles as their predecessors, but are vastly improved in detail and more robust in structure, with provision for greater power, speed and range of speed and feed control. A claim that any design is original, can be true only to a very limited extent, and is open to challenge on the grounds that "there is nothing new under the sun." In adopting the particular features of this machine, my major aim was to obtain the utmost utility with parts which—mainly at least—could be machined by our limited equipment.

Ideal size

An eminent biologist once wrote a monograph on "The importance of being the right size," in which he pointed out that a flea enlarged to the size of an elephant, or an eagle reduced to the size of a gnat, would be quite impracticable. Similarly, there is a definite relation between design and magnitude in machines, and I gave a good deal of thought to all its aspects. The preliminary sketches of the design showed that the problems of construction increased greatly as sizes were enlarged, and I was strongly tempted to keep the main parts as small as possible. All the parts of a small machine of this type, taking up to No 1 Morse shank cutters, could be machined on my ML7 3½ in. lathe, except for the base and compound slide. It would be quite a useful machine too, within its dimensional capacity; but this would not be much greater than that of some of the attachments which I already had and intended to supersede.

The use of steel tubes for vertical and horizontal adjustable members to support the milling head provides for radial swing and extension, and for swivelling movement of the spindle. Machines with circular slides have often been criticised, mainly on the grounds of poor torque resistance and difficulty in maintaining alignments. These tubes, however, are not sliding members in the accepted sense; they are not used for feed or traversing movements, but are firmly clamped while the machine is in operation. The only circular sliding member is the spindle bearing housing, or quill, and this is not subjected to any appreciable torque load or tendency to misalignment. On the other hand, it provides the simplest and most sensitive vertical feed, and does away with the need for a relatively heavy slide to carry the entire spindle head.

In any kind of milling machine, the work table needs to be rigidly supported, and to be adequate in length and breadth for the largest work. Longitudinal and cross traversing movements also need to be ample, with a good bearing area. All this adds up to a pretty large and heavy compound slide. When the slide is supported by a vertical sliding knee as in orthodox milling machines, this in turn must be proportionate in size, and well braced to prevent possible sag of the table. But by eliminating the need for vertical adjustment of the table, the slide can be laid directly on a plain base, to provide rigid support with no further complication. This is not an argument against the sliding-knee machine, which is well suited to general purposes; but the form of table support, and other features of this machine, have advantages from the aspect of simple construction.

The vertical movement of the quill, by a rack and pinion, is similar to that of a sensitive drilling machine; in fact, the

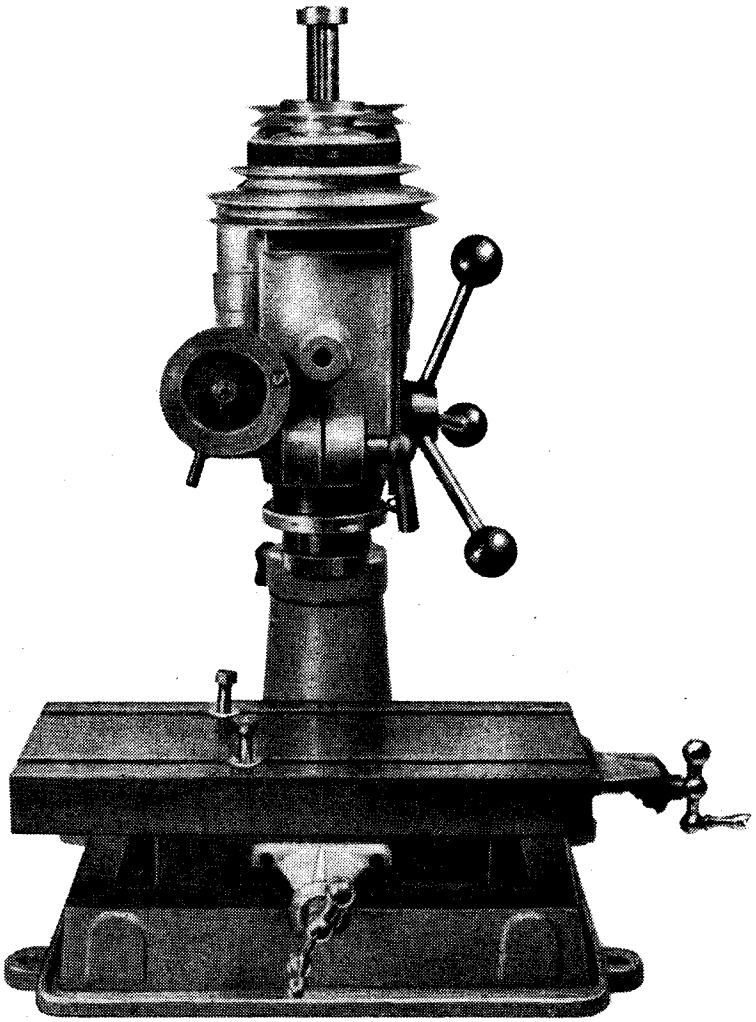

machine can be used efficiently in this capacity, with feed applied by a lever or windlass to the pinion shaft. For milling, which requires a more precise graded vertical feed movement, a worm wheel is fitted to the pinion shaft; a worm giving a high ratio of reduction can be engaged with it. Spring return is provided for the quill; at first I used a torsion spring on the pinion shaft, similar to that of the orthodox drilling machine, but I have changed it to a tension spring acting on the quill directly. The advantage of this arrangement is that it acts as an anti-backlash device, being always loaded in the upward direction against the weight of the quill and spindle assembly. The cutter or drill is thus prevented from snatching when brought into engagement or breaking through a hole, as often happens through lost motion in the feed gear.

To be continued

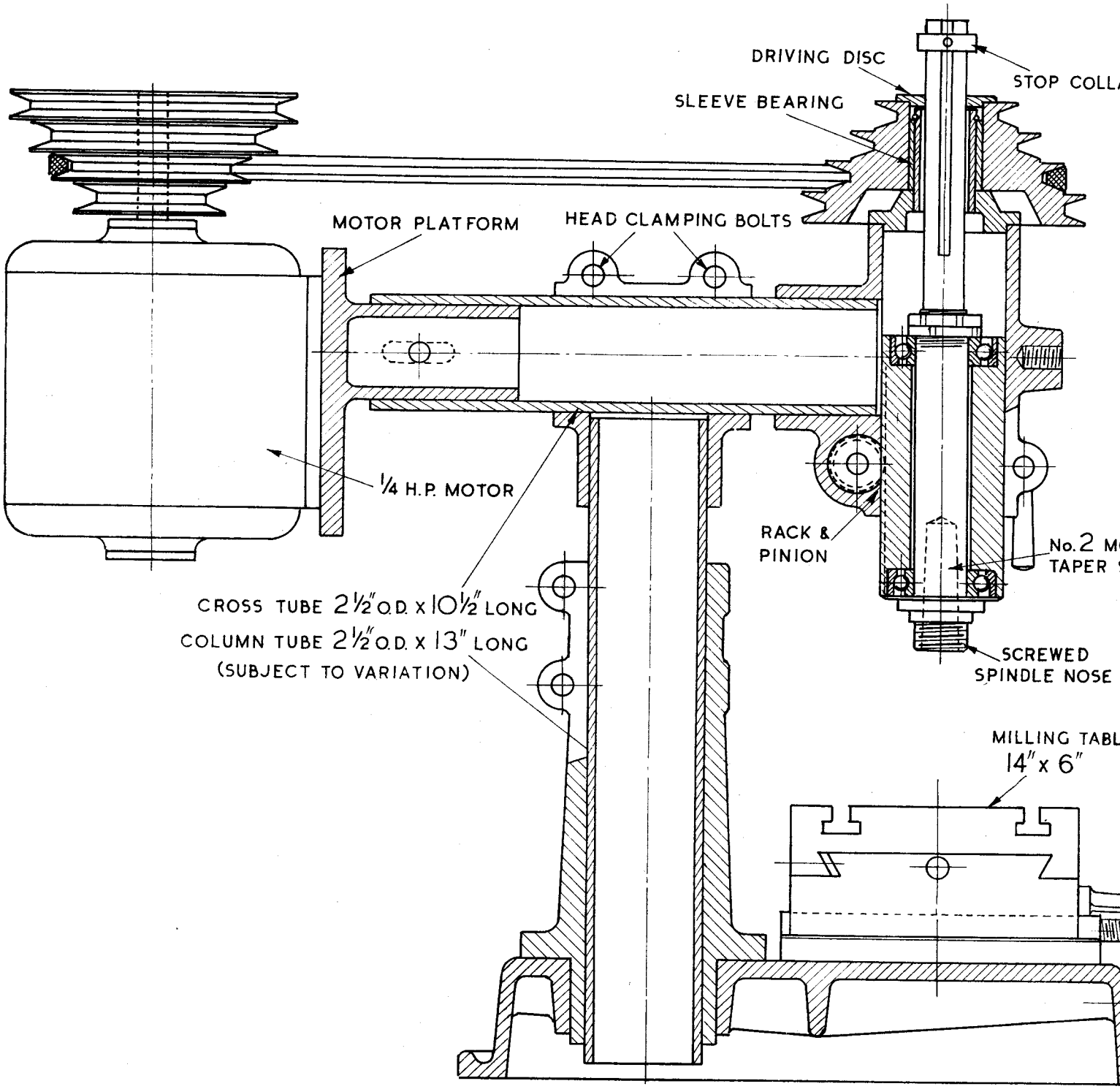

LIGHT MILLING & DRILLING MACHINE ½" CAPAC

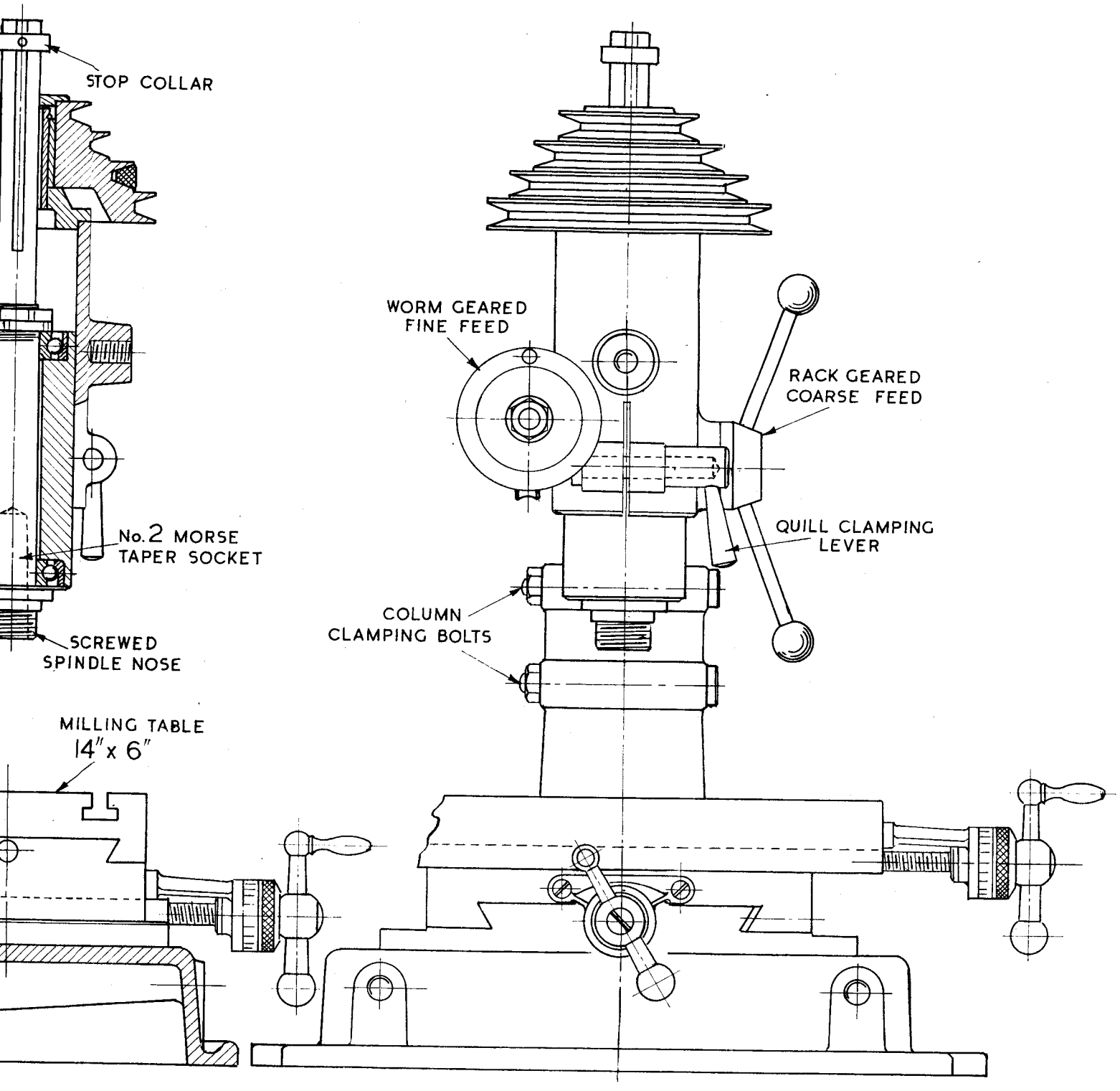

½" CAPACITY

DESIGNED BY EDGAR T. WESTBURY

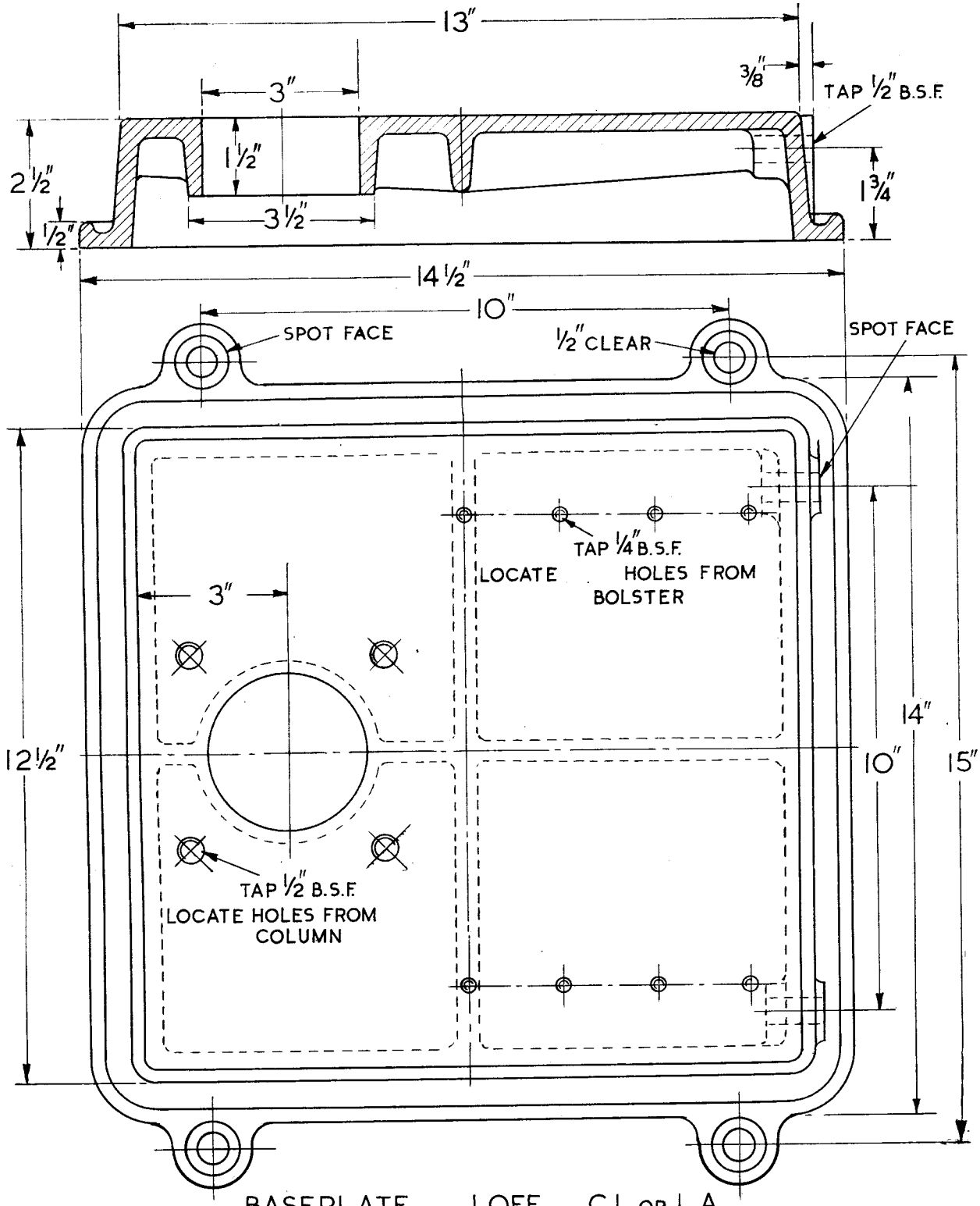

BASEPLATE 1 OFF C.I. OR L.A.

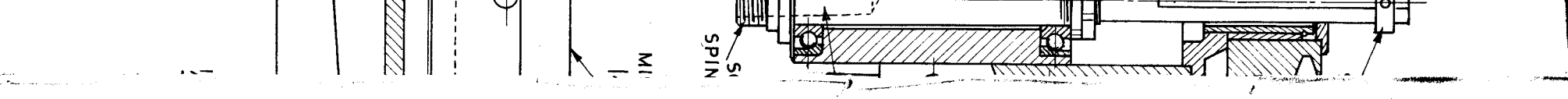

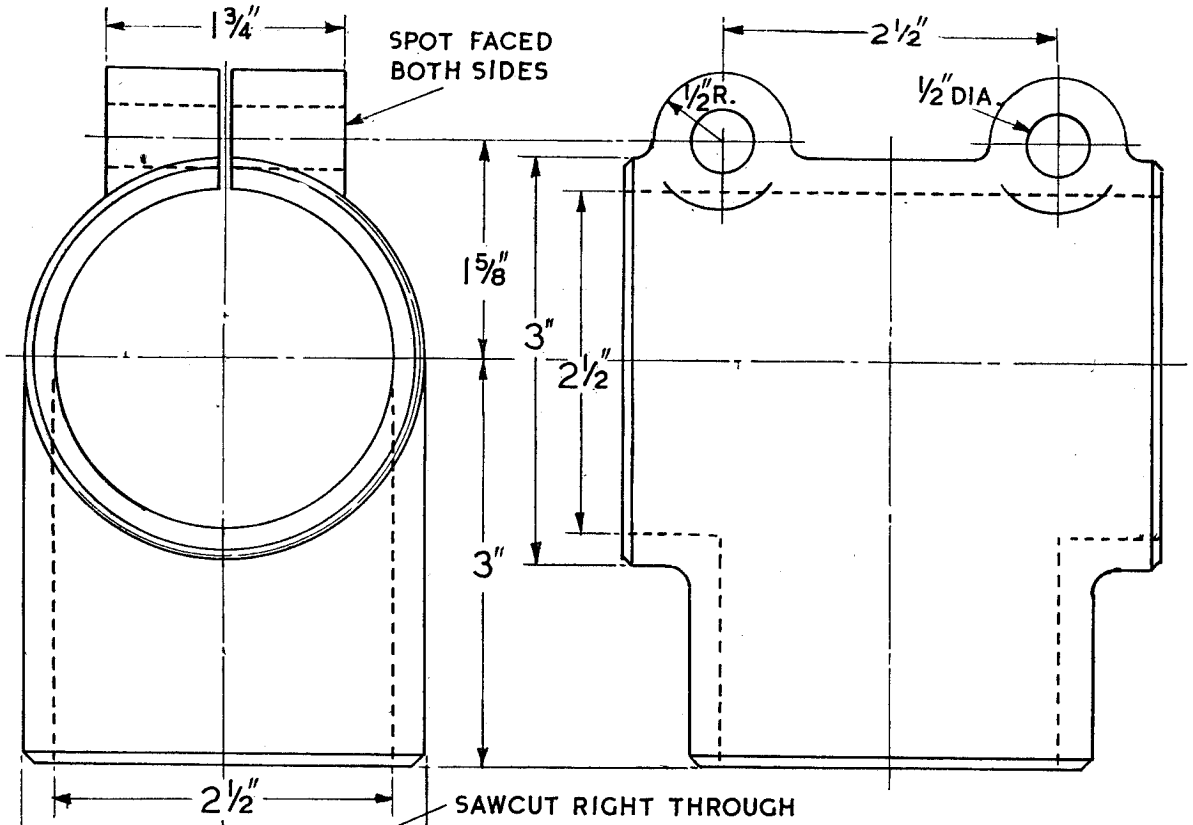

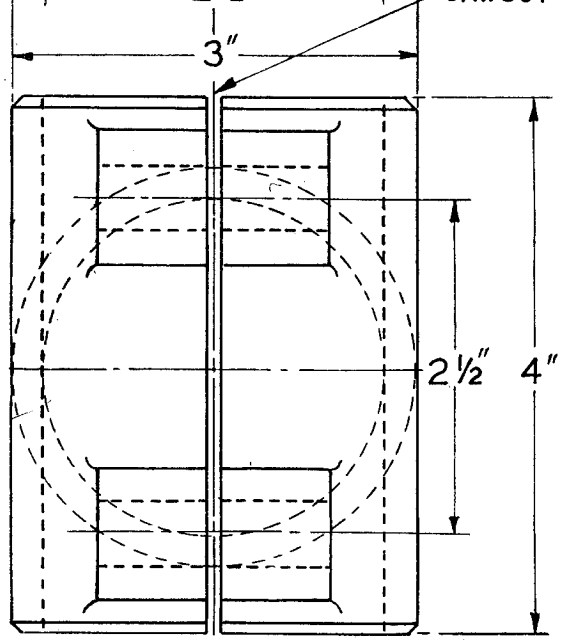

COLUMN HEAD

1 OFF C.I.

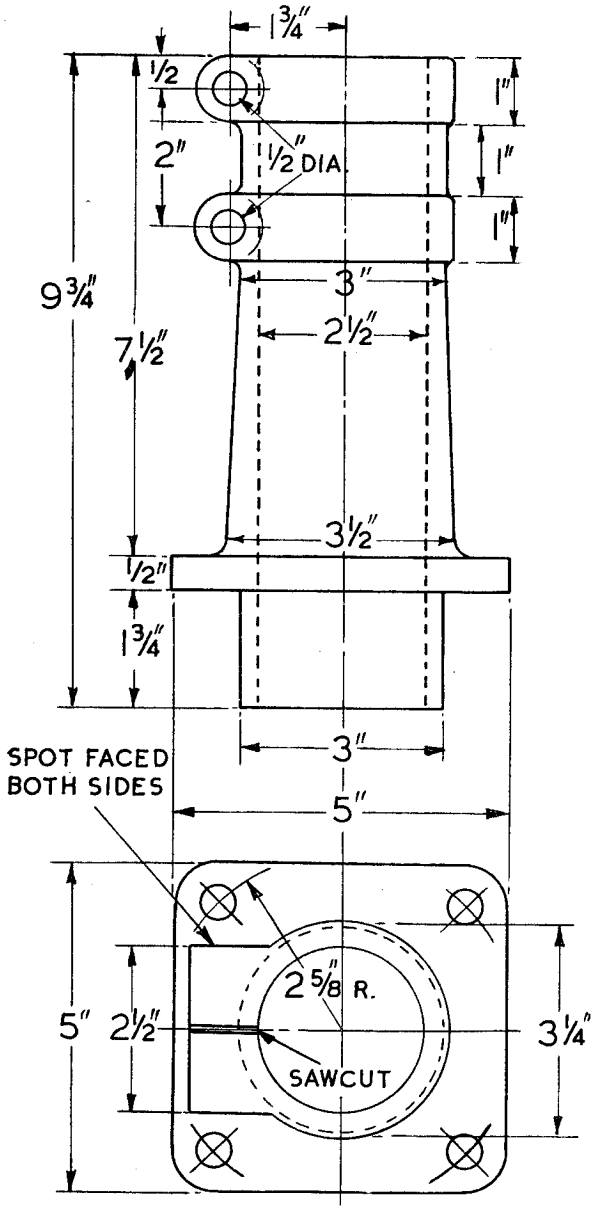

COLUMN 1 OFF C.I.

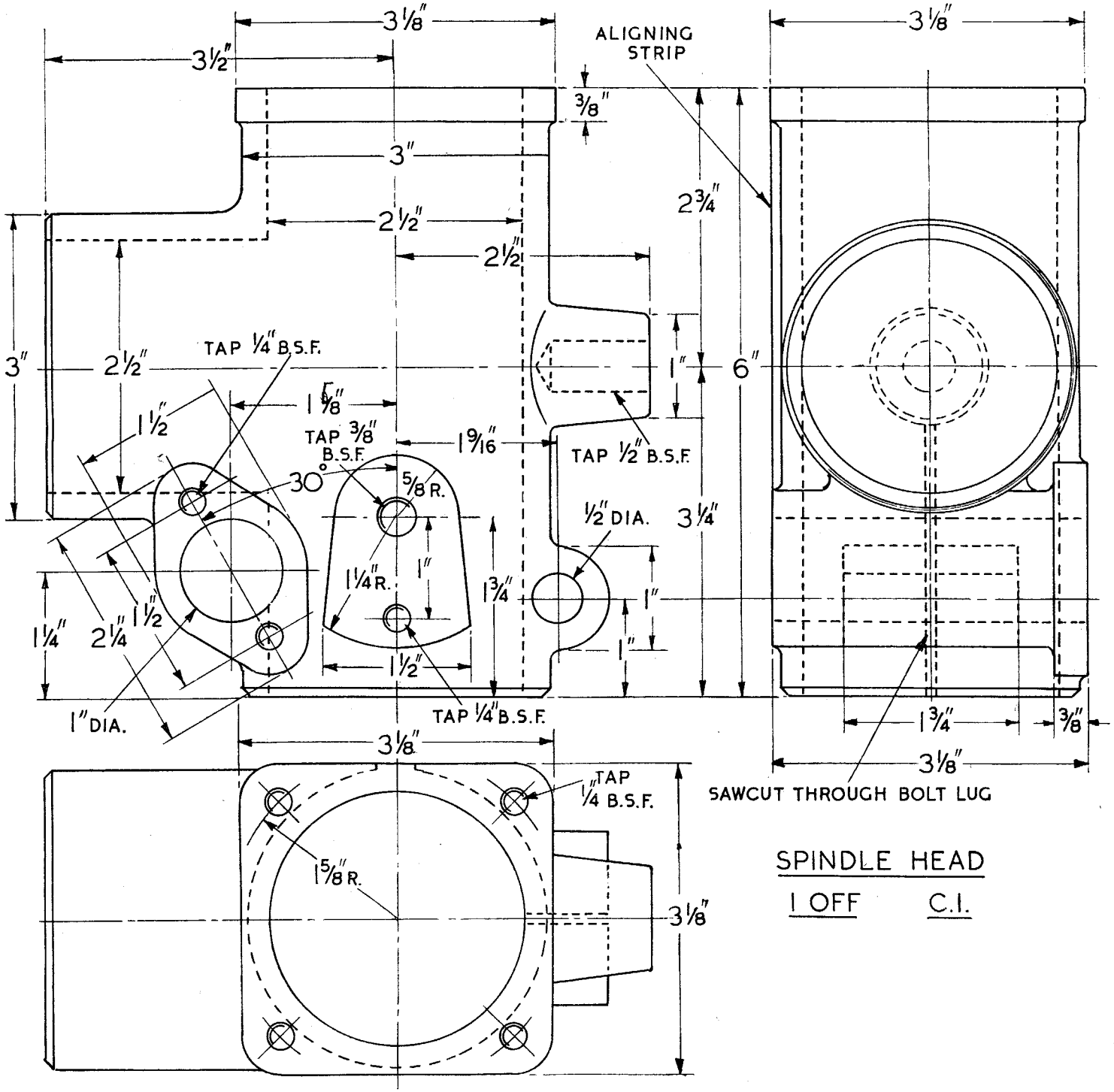

SPINDLE HEAD

1 OFF C.I.

Light vertical MILLING MACHINE

Continued from April 15

By
Edgar T. Westbury

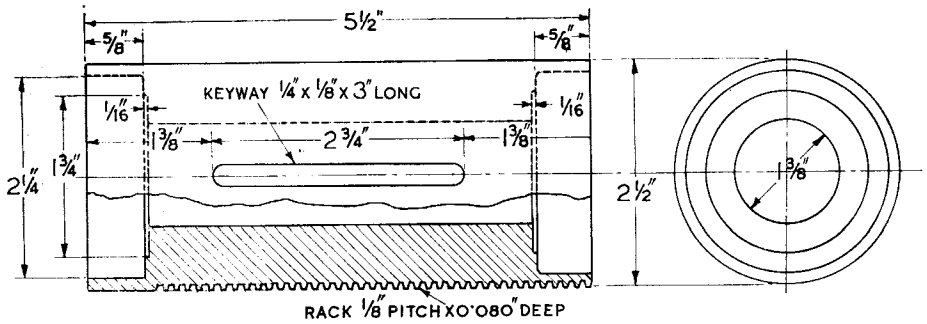

QUILL — 1 OFF — M.S. OR C.I.

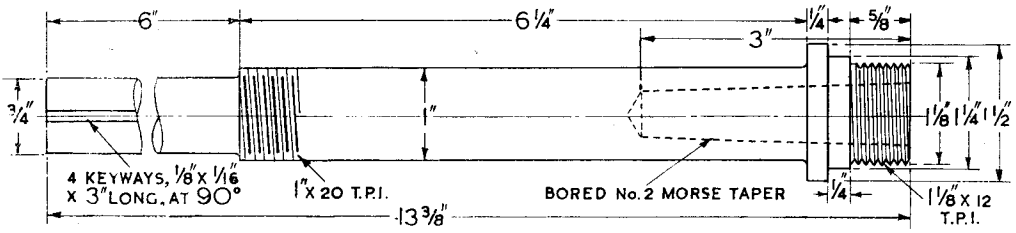

SPINDLE — 1 OFF — M.S.

No great difficulty w

THE spindle bearings are of a type specially suited to the duty of vertical milling, taking radial and axial loads simultaneously and eliminating end play. They differ from the bearings normally fitted to drilling machines, which are intended to guide the drill axially and take cutting end-thrust but have only a limited capacity to withstand side-loading, and have no endwise adjustment. The chucks used for drills, and their amount of overhang from the bearings, are not well suited to driving milling cutters. Drilling machines are sometimes fitted with a compound slide, so that they can be used for vertical milling, but their success for this purpose is generally limited unless the spindle and bearings are drastically redesigned.

After considering several different bearings I decided to use angular contact ball races at the two ends of the quill, with light preload applied to them by the adjusting collars on the spindle. This arrangement has so far proved highly satisfactory, though it is not ideal for continuous or relatively heavy work, such as would be done on an industrial machine. The spindle has a No 2 Morse taper socket and is externally threaded to take the fittings of the ML7 lathe, including the Myford patent collets, which hold cutters up to ½ in. shank diameter with the minimum overhang.

Drive is transmitted to the upper extension of the spindle, through splines, from a stepped pulley, which runs on a steel sleeve mounted concentrically on the top of the quill housing. In this way the spindle is isolated from any side load or shock which may be produced by the driving belt. The pulley is lined with a sintered bronze bush which, when impregnated with oil, provides automatic lubrication. At the rear end of the horizontal cross-tube the driving motor is mounted, so that in any position of the head, the alignment and centre distance between its shaft and the milling spindle is constant, and its weight serves as a counterpoise to the spindle head. As nearly all the work for which the machine is designed can be carried out with relatively high speed cutters, I have not provided reduction gear to the spindle; it could be added if necessary.

Several details have been improved and modified since the original machine was made. These have been included in the drawings and will be described, together with the reasons for adopting them, when I deal with the individual components. Castings for the machine may be had from Woking Precision Models Ltd, Victoria Road, Woking, Surrey. Some of the heavier structural parts will undoubtedly be beyond the capacity of the average model workshop; but they involve only straightforward machining operations, within the facilities provided by some model engineering societies, or they can be farmed out to a general engineering firm.

The largest and heaviest single component is the baseplate. Iron casting is specified, but light alloy would be satisfactory; it is not subject to sliding friction, but serves only as a true base on which other parts are erected. Apart from fettling on the underside to eliminate high spots and make it rest truly on a flat surface, only the top needs to be machined. You could do this by facing it in a lathe with sufficient faceplate and gap capacity, or in a planing machine. Modern industry would probably favour the use of a heavy surface grinder. But some engineers of an older generation would be prepared to tackle this work with hand tools only; the essential thing is that it should be flat and smooth all over, to the same limits as are generally accepted for a marking-out table.

A large lathe is also recommended for the boring and turning of the column casting. Because of the long bore, which must be exactly parallel and smooth, it is best mounted on the saddle and bored with a cutter bar between centres. It can then be mounted on a mandrel, or with truly centred plugs at each end, for turning the underside of the flange and the spigot. Before the boring of this or other components which have to fit the vertical or horizontal tubes, the dimen-

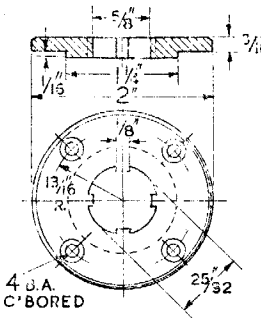

DRIVING DISC
1 OFF M.S.,C.H.

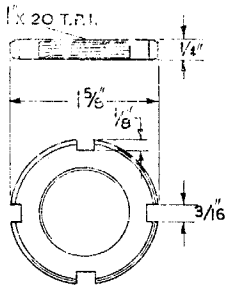

SPINDLE NUT
2 OFF M.S.

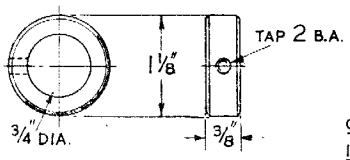

STOP COLLAR
1 OFF M.S.

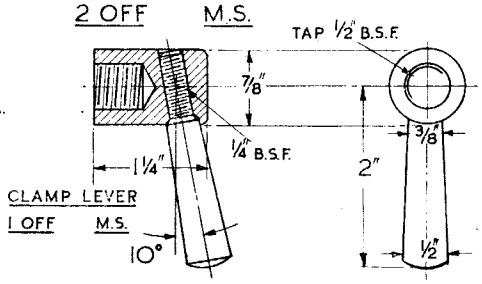

CLAMP LEVER
1 OFF M.S.

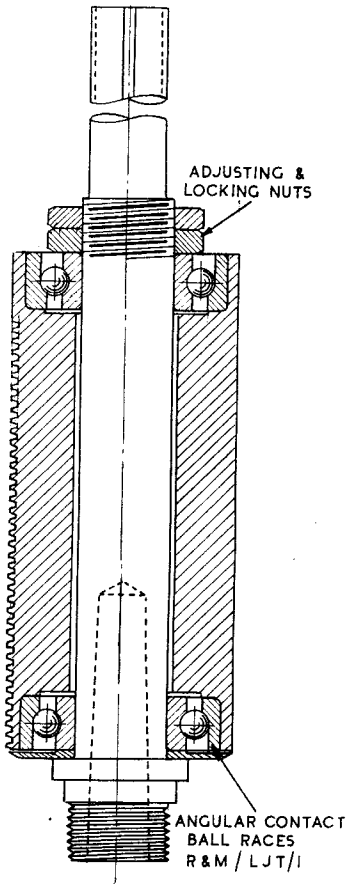

SPINDLE BEARINGS &
QUILL ASSEMBLY

ty with the heavier parts

sions and circular accuracy of the tubes should be carefully checked.

Bright drawn tubing with a good finish, avoiding the need for machining, is now obtainable, but it should not be taken for granted, and if there is any doubt, a ring lap may be used to correct any inaccuracy. The bores of the column, and also the horizontal part of the column head, should be left 1 or 2 thou undersize for lapping or honing to an exact fit. Many garages have honing equipment for bores of about this size.

There is a discrepancy between the column of the machine shown in the photographs and the column in the detail drawing. The machine has a single clamping bolt at the top while the drawing shows two; the obvious reason for the alteration is to improve the security of clamping by distributing the grip over a greater length of the tube. So far, I have had no trouble with the clamp in any operations; but extra precautions against it are well worth while.

The spigot of the column does not necessarily have to fit closely in the hole in the base, as the broad flange gives adequate stability, but if the hole can be machined without difficulty it may as well be a good fit. Its object is to increase the length of column bore available for the guidance of the tube. This is especially useful if the machine is to be mounted on a pedestal or bench with a clearance hole to allow of a longer column tube for height extension. For some kinds of work, such as deep drilling of large components, such an extension may become almost a necessity.

Our conventional form of slide assembly consists of a baseplate or bolster, a cross-slide, and a longitudinal sliding table. The machining of these parts, and particularly of the sliding surfaces, calls for equipment which is not normally found in the home workshop, though some model engineering societies may possess or have access to it. A planing machine with a maximum stroke of not less than 15 in. will cope with the operations required; in modern industry, a heavy vertical milling machine would be favoured for slides of this size, but it is less likely to be used in a small jobbing shop. Compound slides can be bought ready-made in certain sizes; one is made by E. W. Cowell of Watford, whose drilling and shaping machines are well known to ME readers. As the compound slide is a self-contained unit which can be located as required on the flat top of the baseplate, any slide of suitable size can be fitted. The complete assembly can be removed from the baseplate for plain drilling.

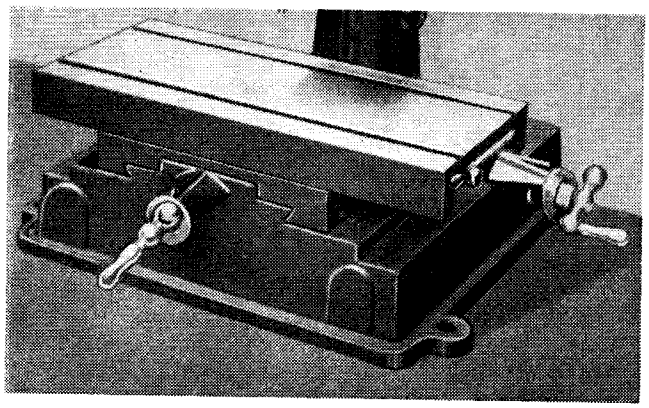

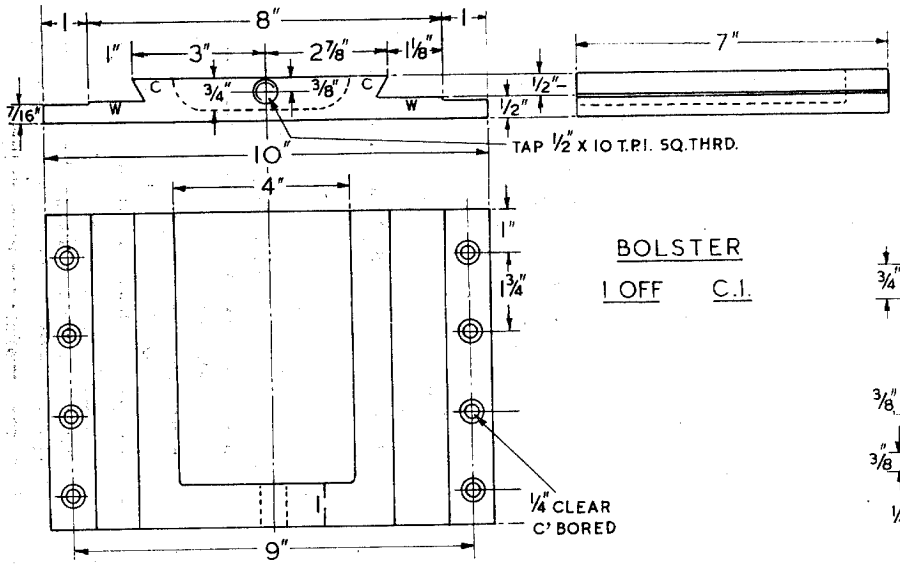

BOLSTER

1 OFF C.I.

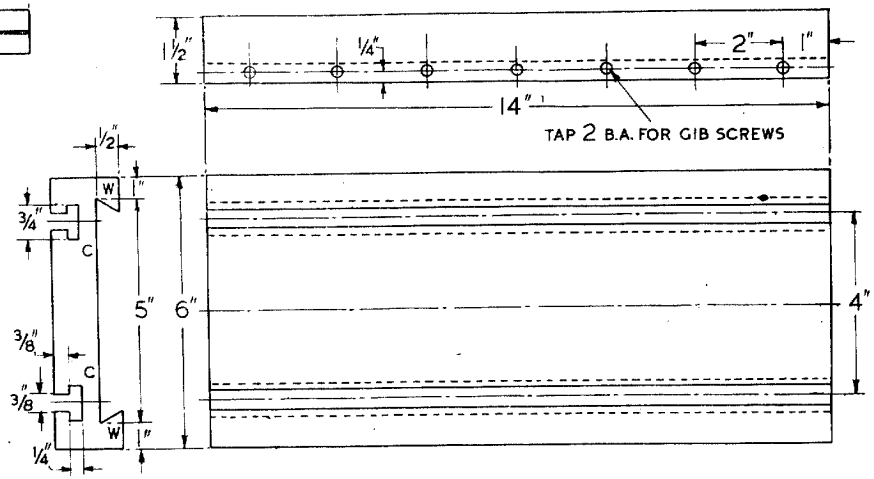

MILLING TABLE 1 OFF C.I.

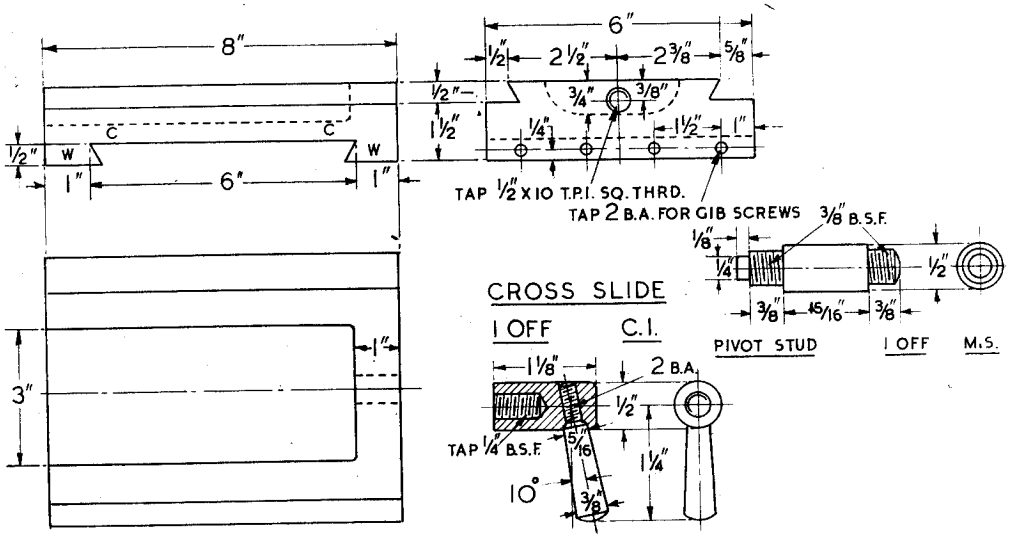

CROSS SLIDE

1 OFF C.I.

PIVOT STUD 1 OFF M.S.

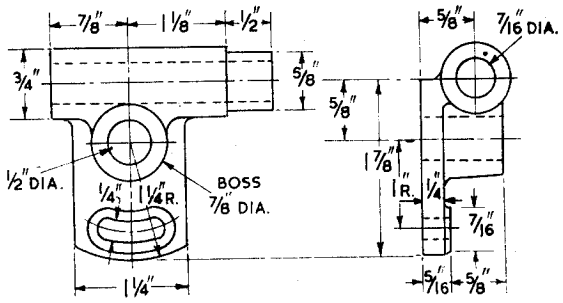

WORMSHAFT BRACKET 1 OFF L.A.

CLAMPING LEVER 1 OFF M.S.

The bolster should first be machined flat on the underside, to bed down on the bedplate, where it is secured by eight Allen screws with sunk heads. You may relieve the centre part of the surface to simplify the fitting, but as the thickness is limited I have thought it better to provide a bearing over the whole surface. On the top side are machined the normal dovetail slide-ways, with sides at 60 or 55 degrees (both common in the workshop). The working surfaces *W* make contact with their mating counterpart; those marked *C* should have a definite but not necessarily large clearance when they are fitted. This applies to all the sliding parts. Although there is no apparent need to machine the end faces and edges of the bolster, it is best to do so, for neatness and for the checking of squareness.

The cross-slide has slide-ways on top and underside. They must be exactly square with each other, besides being parallel in thickness. Clearance is allowed in the slide-way for a ⅛ in. gib strip on

Continued on page 336

Light vertical MILLING MACHINE

FEEDSCREWS and HANDLES

Continued from May 1

By Edgar T. Westbury

HOWEVER accurate the main machining, you will almost certainly need to do some work on the slides so that they will be smooth and will bed in properly. While slideways grinders are used in industry, the amateur must rely on the art of hand-scraping. The essential of success in this process is patience, as the work always involves a good deal of trying and testing which cannot be hurried.

A flat scraper of the normal kind can be used on the relatively broad surfaces, but for getting at the dovetail surfaces the best tool is a triangular scraper with one corner ground off to an acute bevel. Both can be made from old files. You may be able to grind them to shape without letting down the temper, but generally the best course is to anneal them. Bring them to red heat and cool them as slowly as possible (as in ashes or lime). Then, after grinding, filing or forging them to shape, re-harden and temper them, at the tip only, to a light straw colour. It is better to remove the teeth of files completely when re-hardening is involved, or they may form a focus for cracks. The edge of a scraper should preferably be thin, as a thick scraper will not reach into a corner, and it should be kept keen by the honing, on a fine grade oilstone, of the flat face and front edge.

A test slip for the dovetail slides may be made from a piece of flat steel, with its edge machined to the slideway angle. The truth of both faces can be tested on a surface plate. To check the parallelism of slideways, clamp two round bars, such as lengths of silver steel rod about ⅜ in. diameter in contact with the V angles, and take a measurement over the outside of them by a micrometer. The inside dovetails need to be hand-scraped only on one side opposite the gib strip, and the clearance surfaces do not need scraping at all, except for the sake of appearance. But the top and sides of the milling table should be scraped to a close limit of flatness, as tested on a surface plate. Note that any parallel error between the table top and either its own slideway or that of the cross-slide will result in untrue machining of any work bolted to it unless it is packed up and individually checked for each operation.

Holes for the gib adjustment screws are drilled in one side of the cross-slide and the milling table. Before tapping them, assemble the respective slides with the gib strips in position, and pass the tapping drill through each hole in turn and into the strip, to the depth of the point only. The object is to locate the gib strip so that its position in relation to the moving slide is fixed. A hand drill can be used. You will generally find it best, after dealing with one hole in each slide, to tap the hole and fit the screw so that there is no risk of the gib's shifting between the drilling operations. The gib screws should be long enough to allow locking nuts to be fitted; apart from this, unnecessary projection should be avoided.

It remains only to drill and tap the holes for the feedscrews in the cross-slide and bolster. If square thread screws are fitted as recommended, a special tap will be required. There would be no real objection to the use of V threads for these screws, except that standard screw pitches are not very convenient for indexing. Yet another method is to make flanged nuts to take the feedscrews; some modification may then be needed in the location of the screw and its bearing position.

The castings for the feedscrew bearings may be chucked over the circular front boss, faced over the seating flange and inner boss face, and drilled and reamed, all at one operation. A stub mandrel may be used to mount the casting for machining the front of the boss and skimming it over the outside; the skimming is not absolutely necessary if the surface is clean enough to take a legible index mark at the top. The shape of the bearing is designed to give just that little extra length of traverse compared with the more usual flat bearing or keep plate.

Alignment of feedscrews

After drilling the fixing holes in the seating flange, locate it on the face of the slide by fitting the complete assembly, with gibs adjusted and feedscrews far enough in to allow the bearing to be brought into contact with the face. The screw holes can then be marked or spotted for location; if the tapped holes or nuts for the feedscrews have been accurately located the screws will be in correct alignment at any position of slide travel.

Machining the feedscrews is a normal exercise in screw-cutting. Owing to their length and especially the length of the table screw, the fitting of a travelling steady will be a necessity. You may use a piece of ½ in. bright mild steel bar, if it is quite straight and true and is centred truly at each end, with the thrust collar either pressed on tightly or brazed before the final machining, instead of turning down the main length of the screw from ¾ in. diameter, a tedious and wasteful process.

The tool employed for cutting the square thread should be ground to a width of half the pitch, 1/20 in., or 0.050 in. with the barest amount of clearance for pitch angle on the leading side, and none at all on the trailing side. The front clearance can be the normal 5 to 7½ degrees, and top rake up to 15. If you employ a properly adjusted travelling steady with hardened V contact surfaces, and lubricate with

soluble oil, the going should be easy, and the amount of feed at each pass may be constant, about 5 thou, up to the full depth of 50 thou. If you need to make a tap to cut the square threads in the slides, you should use the same screw-cutting tool, but the crest diameter of the thread should be two or three thou greater and the root smaller by the same amount. Make the tap about 3 in. long, with a gradual taper and three or four deep flutes, for easy cutting. Silver steel, hardened in oil, is suitable for the tap.

The indices and handles for the feedscrews can be modified according to convenience and preference. You may buy them ready-made, and perhaps you can get complete feed-screws in standard sizes and lengths. There is also much to be said in favour of disc handwheels with index markings on the edge, giving a very plain and legible reading; but the ball-type handle with separate index is generally preferred. Sometimes the index is simply tapped and screwed on to the shaft of the feedscrew, with the handle also internally threaded, locked against it. This is usually satisfactory for light torque load, but as the index is fixed relatively to the handle, many users find it inconvenient.

With the arrangement shown in the drawings you have a ready means of thrust adjustment, and also of moving the index, without any serious constructional problems. A conical steel nut, with spanner flats on two sides, is screwed on the feedscrew shaft to take up end-play in the bearing, and is locked by the hub of the handle, pressed against it by a countersunk end screw. The index is bored to fit the conical nut, and is recessed at the back to take a double-turn spring washer, backed up by a plain washer. This allows the index to be frictionally adjusted, while it is secure enough for there to be no risk of inadvertent movement. The plain washer may be varied in thickness to provide just the required amount of friction.

After turning, boring and knurling the index discs, mount them on an arbor or stub mandrel for engraving the divisions. Use a keen V-point tool, placed on its side in the toolpost at exact centre height. The lathe mandrel can be indexed with the aid of a gear wheel and spring plunger, described in ME and in the PM Handbooks *Lathe Accessories* and *Milling in the Lathe*. A 100-toothed wheel should be used, but it is not usually found in a standard set of lathe change wheels and a 50-toothed wheel is the next best thing. Some users may be satisfied with 50 divisions, representing increments of two thou movement on the feedscrew, but you can split the divisions by going round the disc a second time, with careful re-adjustment of the change wheel. The marks should be cut to about 10 thou depth, and the length of cut adjusted by limiting the saddle movement. A convenient way is by fitting a stop on the lathe bed, set to suit the long marks to count tens and fives, and interposing a slip of metal between the saddle and stop for the remaining short marks. The numbers may be stamped, etched or engraved according to what facilities you have.

The machining of ball handles for machine tools has been described in these pages. It is an operation in which the skill and judgement of the operator is far more important than any written instruction. Form tools are of course impracticable for light lathes. A spherical turning device is helpful, but hand turning tools can be, and often are, used to form the ball contours accurately enough to satisfy the eye. I recommend that you employ a piece of 1 in. steel bar long enough for chucking, and a bit extra for centring. Form the small ball at the outer end, after cutting back far enough to allow the centred end to be ultimately parted off. Turn the tapered parts by swivelling the topslide to 1½ in. degrees, and rough out the balls as closely as possible with slide-rest tools, checking with radius gauges. You should neck down the end balls as far as possible without weakening their support, before you finish them to shape, by hand or generating tools. After parting off, finish the ends by chucking them over the centre ball, the finished surface of which may be protected by being wrapped in thin sheet copper or aluminium.

Hold the handles crosswise in the four-jaw chuck, again protecting the finished surfaces, for cross drilling and facing the centre ball. Countersink the other side by mounting it on a stub mandrel. To ensure parallel alignment of the tapped hole for the crank handle in the small end ball, you may use the centre hole to secure the work by a setscrew to a flat plate, which can then be set up on the faceplate with the small end central. The contour of the crank handle is formed by hand tools and the handle threaded on the end to screw tightly into the ball. When the handle is fitted to the feed-

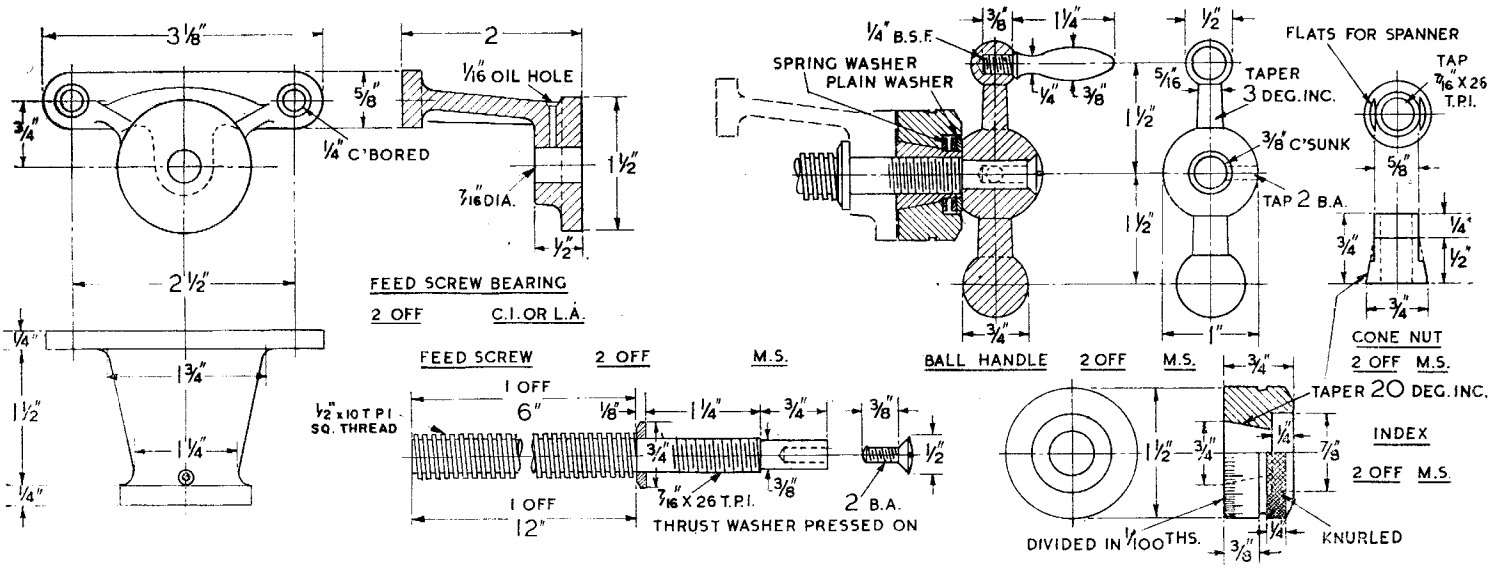

screw, and is secured endwise by the countersunk screw, a socket-head grubscrew, bearing on a dimple or flat on the shaft, locks it rotationally.

Both the column head and the spindle head castings involve two boring operations. It is extremely important that these parts should be exactly at right angles to each other, for accuracy in the vertical location of the spindle when the machine is assembled; and to correct errors after the parts have been machined is difficult or impossible. The method of machining will depend on your facilities. Generally it is best to bore and face the blind hole first, and then mount the casting on the saddle of the machine for boring the main through hole with a cutter bar between centres. A lathe or boring machine with a large capacity will be required; the Murad Bormilathe, which is provided with elevating movements for both the headstock and tailstock, is specially suited to dealing with work of this kind.

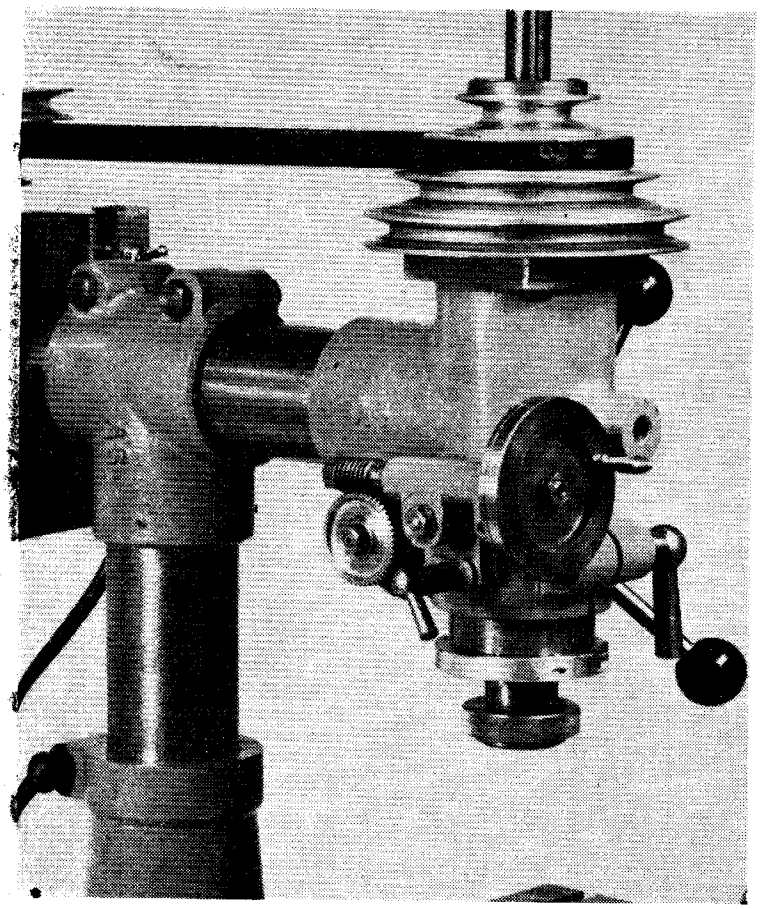

Spindle head and column head assemblies

For the first operation, either casting can be mounted on the lathe faceplate, with brackets made from heavy gauge angle iron at each end, and a long bolt through the main bore. If the faceplate is of limited size, the brackets may need to be turned inwards for the spindle head, which is 6 in. long plus a machining allowance at each end. To avoid any tendency of either casting to twist under the cutting load, you may clamp steady blocks to the faceplate, in contact with the lugs at the rear.

As the bores have to be machined to fit tightly on the vertical and horizontal tubes, interference fits are specified. In the lack of special facilities, such as a large hydraulic press, the best way, in my experience, is to shrink them on. The shrinkage allowance for cast iron, for a diameter of 2½ in., may be up to 5 thou, but quite a secure grip may be obtained on smooth accurate surfaces with 3 to 4 thou; this makes fitting easier, and removes the risk of jamming during the process. If you have no means of internal measurement to the required limits, you can turn an improvised plug gauge from any odd piece of material, 4 thou smaller than the tubes, for sizing the bores. You may use the machined front face of the blind hole as a bolting face when you are mounting the casting on the saddle for boring the long hole, but take care to see that the boring table is truly horizontal, parallel with the lathe axis, and that the casting is not tilted when bolted down. While a single heavy bar, or strap with bolts as close to each side of the casting as possible, will suffice for holding it, the fitting of additional steady pieces to prevent risk of movement, is a wise precaution. The bore of the spindle head demands special care if it is to produce a truly parallel and smooth surface, as it forms a sliding bearing for the quill or bearing sleeve.

Close machining limits essential

It is not practicable to allow more than a bare one thou for finishing by lapping or honing, as the bore is broken by the cross hole in the middle. On the other hand, the middle part of the bore cannot be relieved, because the quill must have close contact with it for its entire length. The column head needs to be a close sliding fit on the horizontal tube. You now have only to face two ends, drill and face the lugs to take clamping bolts, and slit right through at the top.

The spindle head casting may be held by a single long bolt through its centre, on the boring table, for boring the pinion housing and facing its flange; at the same setting, the facing for the seating of the wormshaft bracket may be milled flush with the flange. The hole for the spindle head clamp is drilled ¼ in. lower than the pinion centre and spot faced at each end; then a sawcut is made through the middle of the lug, from the bottom, up to the centre boss of the casting.

As the purpose of the boss, with its central tapped hole, may be in question, I will explain that it was intended to provide a means of steadying the spindle head, should steadying be needed in specially heavy milling operations. Stays or struts, such as those used on horizontal milling machines, can be fitted from it to the corners of the base casting. So far, I have not needed this provision. The boss may be found useful for the attachment of an optical or other means of setting the spindle truly vertical, or at a specified angle.

To shrink the tubes into the head casting, heat them by a bunsen burner or blowlamp up to a black heat (just short of luminous) and hold them in a vice with the cross bore vertical. The tube should be as cold as possible—use refrigeration if you can—and may have a smear of moly or graphite grease. You will then be able to slide the tube into the casting by hand. Take care not to insert it far enough to foul the long bore; a collar clamped on the tube will positively prevent this.

You should lose no time in carrying out this operation, but there is no need for frantic haste or panic. As an extra security against movement, I have drilled and tapped three holes to take sunk ¼ in. grubscrews in each of the castings, but I do not consider them absolutely necessary.

To be continued

Light vertical MILLING MACHINE

Continued from May 15

By Edgar T. Westbury

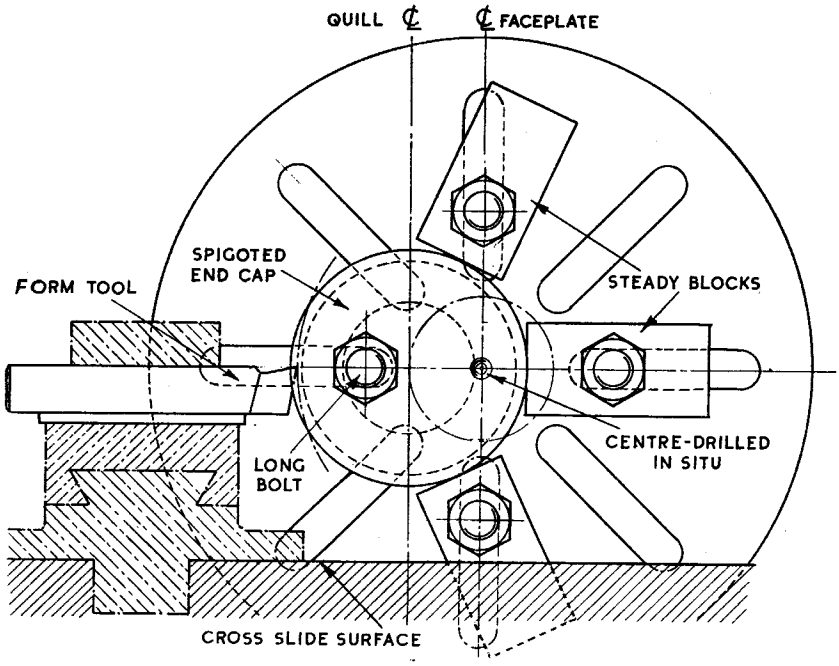

METHOD OF MACHINING RACK TEETH

How to make the components of the spindle group

DETAIL drawings of the spindle and quill were shown in the instalment for May 1, on page 318, with minor group components, and the assembly of the spindle in its bearings, on page 319. A piece of 1½ in. dia. mild steel bar 13½ in. long (to allow for end facing) will be required for the spindle. To avoid risk of distortion after the machining, you can normalise the steel by heating to redness and allowing it to cool naturally. You can centre drill the two ends, preferably in the lathe, by holding one end in the chuck, running the other in a fixed steady and then applying the drill from the tailstock. If this is not practicable, a centre-finder may be used, or the bar may be laid in V-blocks and marked out with the surface gauge, in the traditional manner, before the drilling by hand or machine.

The bar may be mounted between centres and rough-turned to within about $\frac{1}{32}$ in. of finished size all over. Owing to its length, there will probably be considerable spring near the centre, and this must be allowed for in sizing. By using a keen tool with a narrow cutting edge, you will be able to maintain concentric accuracy and avoid chatter. At this stage you had better check the straightness of the bar in case it has become distorted; a serious error is unlikely, but it is better to be safe than sorry. The use of a fixed (three-point) steady is considered essential to further operations on external machining.

Opinions differ whether the boring of the taper socket should be carried out before the outside of the spindle is finished or afterwards. I prefer the former method. For this operation, the small end of the spindle should be chucked truly, and the other end run in the steady. Reference has been made in ME to the tendency of work to move endwise when it is supported by a steady; this would be fatal to accurate taper boring, and must at all costs be avoided. It is nearly always caused by the incorrect adjustment of the steady pads, so that the work is forced out of true centre alignment. If the back centre is used to support the end of the bar while the radial position of the pads is adjusted and locked, no trouble should be encountered.

No 2 Morse taper is 0.599 in. per ft, equivalent to slightly under three degrees included angle (there is no point in working this out exactly, as the graduations of the swivelling slide, even on the best lathes, are rarely accurate enough to be relied upon alone, and some trial and error is nearly always necessary). The socket should first be drilled $\frac{9}{16}$ in. dia. to a depth of 2¾ in., which will give sufficient end clearance for standard Morse arbors. If drills which have a driving tang on the end are to be used, the depth should be not less than 3 in. As we cannot slot the spindle to allow a taper drift to be used for extracting drills, some other means of doing so must be employed if this contingency is likely to arise. Generally it will be best to use parallel drills, cutters and arbors, held in a collet or another type of chuck which has a positive extractor.

A No 2 Morse reamer will help greatly in producing an accurate socket, but it should be used only for finishing, and not for taking out a great deal of metal. In the lack of a reamer, the socket must be bored with a tool set exactly on centre level, and as large and rigid as possible. Well before reaching finished size, you should make tests with a standard lathe centre, or another taper-shanked tool, free from bruising or inaccuracy. Application of mechanic's blue or a similar marking colour to the gauge piece will show up errors or high spots in the socket. You must correct the errors by resetting the angle of the slide. The finished bore should be 0.700 in. dia. at the mouth.

After finishing the socket so that the gauge piece shows

even contact over the full length of taper, you must carry out further machining of the spindle by locating from this bore. One way of doing so is by inserting an accurate Morse taper hollow centre, which permits the spindle to be mounted between the normal lathe centres; but for all finishing work, except screwcutting the nose, I prefer to use a plug mandrel turned in the chuck, as this gives steadier support than a point centre.

Assuming that the spindle still runs truly in the centre (if not, a fine skim may need to be taken to correct it), the steady can be set on the larger diameter to give support while the slender part is turned. It is not advisable to allow the steady pads to bear directly on finished work, except for brief operations, owing to the risk of scoring the surface; a strip of sheet brass, bent round and interposed between the pads and the work, will act as a bearing bush and prevent this. Good lubrication here is of course essential. After finishing the smaller diameter to size, and truly parallel, you may transfer the steady to this surface for finishing the larger part, up to the thrust collar.

The fit of the ball races on the spindle is of the utmost importance. While the lower one may be made a light press fit, as its position is fixed, the upper one should be slightly easier, to allow of endwise adjustment, but must on no account have any play. It is permissible to finish the spindle with a very fine Swiss file, but lapping with a ring lap is more precise, though slower. The fine thread for the adjusting collars can be screwcut while the steady is in position; for turning and screwcutting the nose, the spindle must be reversed end for end, and supported by a truly centred plug, or a running centre. Leave a slight radius, or fillet, in all corners.

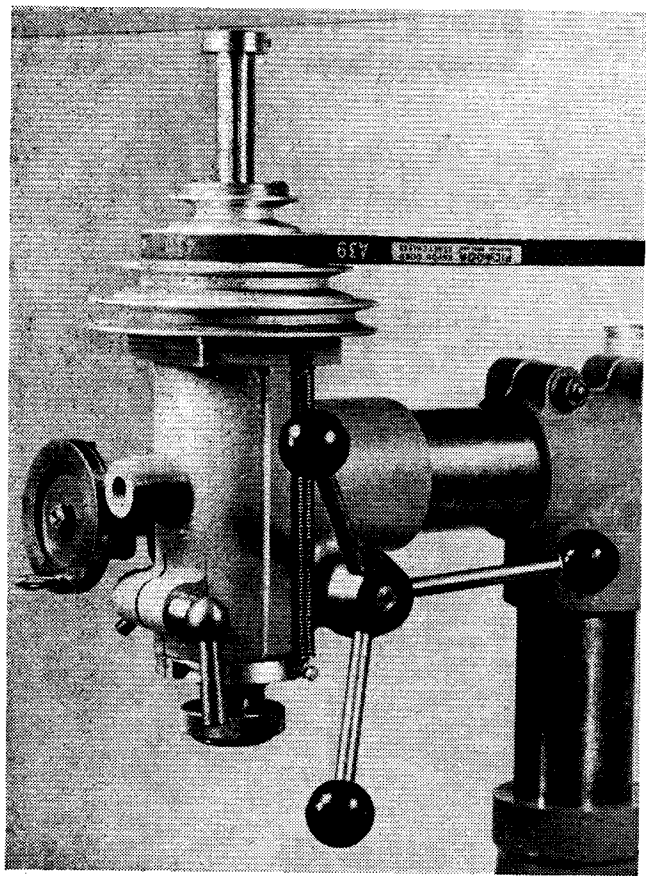

Complete spindle head assembly

My method of cutting the four keyways at the top end of the shaft was to use a Woodruff cutter in a milling attachment on the vertical slide, with the spindle between centres, steadied in the middle as before. It was indexed in the four positions by a change wheel. The number of keyways may be increased, or the shaft splined or serrated, at the option of the constructor, but four have proved adequate to take the driving torque.

Possibly the quill could be made from a piece of the tubing used for the structural members. This is rather light and as I could not get a thicker-walled tubing I used a solid piece of mild steel bar. It was drilled through the centre, bored true, and recessed at one end while set up in the four-jaw chuck. To ensure truth of the recess at the other end, I mounted it on a stub mandrel held in the chuck. An improvised plug gauge, 0.0005 in. smaller than the outer ring of the ball race, was used for sizing the recesses.

Accurate fitting is again important at this point. Note that the face of each recess must be relieved so that the inner ring of the ball race cannot rub against it. The races used are made by Ransome and Marles, reference LJT/1; if other makes are adopted, slight differences in detail specifications may call for modified dimensions. I have already explained that several different bearings, and methods of preloading them, are practicable.

External machining of the quill, to the closest possible sliding fit in the spindle housing, is best carried out by locating from the bore on a mandrel between centres. Lapping is again recommended for final fit and finish. The rack for the vertical traverse of the quill might possibly have been easier to make as a separate part, but it would complicate the design of the housing, and would offset the thrust line further from the spindle centre, in relation to the length of the sliding surface, than might be desired. For this reason I decided to cut the rack teeth in the quill itself.

There are several ways of machining a rack. Special-purpose machines are usually employed in production practice, but a horizontal milling machine with an adequate cross traverse is quite efficient for cutting one tooth at a time with a form cutter. It is also possible to cut the teeth in the lathe, with a cutter spindle parallel to the lathe axis, traversed either across the top or at the front, on a vertical slide. But to arrange the drive for the cutter may present a difficult problem. The method which I adopted is unorthodox, and produces a convex tooth form which, theoretically at least, has relatively small bearing surface for engagement of the pinion; but it involves the minimum amount of special equipment, and the result is quite satisfactory.

You must make an end cap, preferably spigoted to fit the recess at the bottom end of the quill, and about $\frac{1}{4}$ in. thick. A long bolt is also required to clamp the quill endwise against the faceplate, in an eccentric position. The Myford ML7 lathe, on which the actual operation was carried out, has about $2\frac{3}{16}$ in. clearance over the cross-slide, so that the maximum eccentric radius for the quill was only slightly over $\frac{3}{4}$ in. For the long bolt to be anchored in the slot of the faceplate, it had to be located eccentrically in the quill, and the end cap was drilled to correspond with this, to take the other end of the bolt.

After mounting in this way, I checked along the length of the quill to make sure that it was parallel with the lathe axis.

Continued on page 421

CLUB NEWS

Send news and notices to The CLUBMAN, 19-20 Noel Street, London W1

Docks trip

Reading SMEE are organising a trip to Southampton Docks, at a charge of £1 per head, including lunch, on July 25. The trip will start from Reading by train, and the tour of Southampton Docks will be by coach. A welcome is extended to other clubs who would like to go along. Those interested should contact the secretary, Mr G. Shayler, at 14 Westwood Road, Tilehurst, Reading.

The club is now pressing ahead with the arrangements for the 1964 summer, and the live steam section has a full programme of events to attend. The OO gauge is being extended and will be displayed.

A meeting is held every Thursday evening, and once a month a talk or a film show is given. Anyone interested in visiting the club or exchanging ideas should contact Mr V. P. Anger, 109 Alpine Street, Reading.

Chairman's sudden death

Chairman of Perranporth and District MES, treasurer of Redruth Gladiator Club and a member of the West of England TES, Mr Richard Ewart Bawden of Camborne, Cornwall, died suddenly at the age of 63. These organisations were represented at his funeral held at the Wesley Chapel, Camborne.

MPBA National Regatta

The annual National MPBA regatta will be held at Witton Lakes, Birmingham on Sunday, June 7, at 10 a.m. Both these excellent lakes will be used for the event, which is really three regattas held together.

There will be competitions for radio control, free-running craft and hydroplanes, and for the best performance in each class the winner will hold a cup presented by the City of Birmingham for a year and he will retain a miniature.

Hydroplane enthusiasts will also have the opportunity to compete for the Ayrshire Cup, presented by a member of the pre-war hydroplane school, Mr Rankine of Glasgow, for standing-start hydroplane races.

The venue is most suitable for this event, but the support given last year was disappointing particularly by owners of free-running boats, and it is hoped that better support for the regatta will be forthcoming. Negotiations are proceeding to obtain the attendance of a tea bar and soft drink bars, but the area is well suited for a picnic and if the weather is dry cars can be parked overlooking the lakes.

Posthumous award

Birmingham SME Cup Competition Day was held recently. There was only one entry for the Picknell Cup, which is for finished work. This was awarded posthumously to Charlie Cockayne, who had put the finishing touches to his 5 in. gauge 0-6-0 PT *Speedy* only a few days before losing his life in a motor accident. Other members who had intended to compete withdrew as a gesture of respect, it being felt that this was the best way to pay tribute to Mr Cockayne and his painstaking work.

There was a good number of entries for the Lehmann Cup, for unfinished work. It was won by Bill Finch with his fine 5 in. gauge LNWR 2-4-0 *Precedent*.

Diary dates appear on page x in the advertisement section.

MILLING MACHINE *Continued from page 403*

Error is unlikely unless the mounting face is untrue; it could be corrected by a slip of thin paper or metal foil under the face at front or back. To prevent any risk of movement, you may bolt steady pads to the faceplate in contact with the quill, as shown. They may be made from fairly heavy bar, as they help to act as balance weights, but neither they nor the bolts holding them must project far enough to interfere with the traverse of the cutting tool. Balance is not critical, as the lathe cannot be run very fast for this operation; bottom direct drive is the maximum, and some cautious readers may prefer to use back gearing.

To be continued

SHAKESPEARE'S SHIPS *Continued from page 409*

from 2.3 to 3.0 for large ships and reached as much as 3.9 for the small. As we also have the length of the overhangs fore and aft, we can easily calculate the overall length of the ship from the keel-length. Taken together, the overhangs were two or three feet longer than the ship was wide. The depth in hold, throughout the Navy, was about half the breadth.

In the pursuit of these clues all the work has already been done for us. But there is still plenty of detection which the serious modeller can undertake on his own; indeed, he is often compelled to undertake it if his model is to be more than a general representation or a guess. And he will tell you that it really *is* fun finding out.

JOSEPH MARTIN.

HYDROFOILS *Continued from page 413*

from the water progressively as the boat gains speed. The other is that the foils should remain submerged at all times but should rise just near enough to the surface of the water to lift the hull clear.

The second system, excellent in theory, obviously needs some system of control over the angles of the foils for the boat to be "flown" through the water in the same way as an aeroplane is flown through the air. An auto-pilot which could sense the movement of the waves and continually adjust the angles of the foils would solve the problem, but its design would be entirely complicated.

It is also possible that some mechanical device could be developed to achieve the same object. As early as 1906 one proposal was put forward by an American, William Meacham, for a system employing a long arm to reach forward from the boat and support a small "sensing" foil which would skim across the surface of the water. As the wave ahead of the boat rose, it would affect this foil, which would then react through a system of linkages to make compensating adjustments to the main foils beneath the boat.

Although the problems involved in achieving stability by mechanical means were the subject of much experiment, many felt that the secret of success lay in the design and placement of the ladder foils, which had already proved to be efficient. There were many variations in the type and placement of the foils. Some boats had a single tier of foils and others had multiple tiers.

To be continued

Light vertical MILLING MACHINE

Continued from June 1

By

Edgar T. Westbury

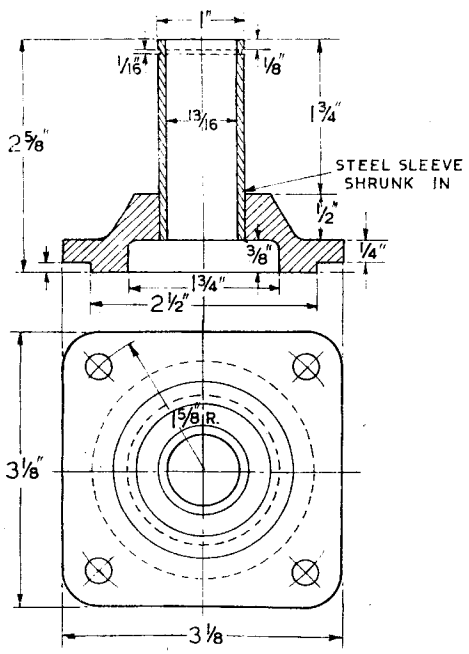

LEY BEARING 1 OFF C.I. OR L.A.

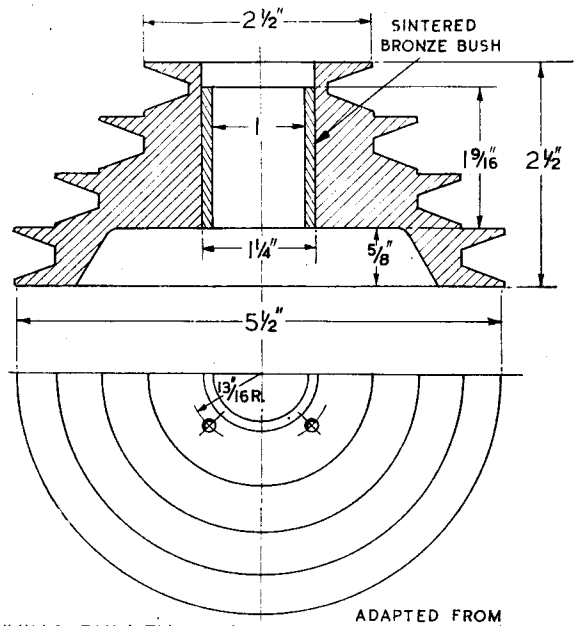

DRIVING PULLEY 1 OFF ADAPTED FROM STANDARD PULLEY

AFTER the quill has been mounted securely in position, the end cap should be centre-drilled for supporting it by the back centre. The rack teeth may now be machined, with a tool mounted normally in the lathe toolpost. You obtain the linear spacing of the teeth to the correct pitch by traversing the saddle a definite distance for each cut. With the 8 t.p.i. leadscrew, exactly one turn each time is required. If the leadscrew handwheel is not indexed, it must be marked so that its position can be assured. Make certain that the threads of the leadscrew and clasp nut are clean and in good condition, and that the slides of the nut, together with the saddle, are closely adjusted. The depth of cut can be measured by the cross-slide index; and if a limit stop can be fitted, so much the better.

Gash all the teeth in first with a parallel tool, not more than 0.040 in. wide, as this greatly relieves the load on the forming tool, which is of Acme thread form, with flanks at an included angle of 29 degrees, and 0.045 in. wide at the tip. The depth specified on the detail drawing is slightly greater than the normal standard, to give ample tip clearance for the pinion teeth. You will not find it difficult to grind the tooth to the correct form on a bench grinder fitted with an adjustable tool rest, checking the angle by a protractor with the aid of a lens, and grinding the tip last to adjust the width.

In use, the tool should be securely mounted in the toolpost, with minimum overhang, and the topslide should be gibbed tightly or otherwise prevented from moving inadvertently. Though the drawing shows the rack cut right to the bottom end of the quill, I have not found this necessary; it need not extend nearer than ¾ in. from each end, giving a rack length of 4 in.

To complete the machining of the quill, we mill a closed keyway in the centre part of its length, at right angles to the centre line of the rack. The object is to prevent any tendency of the quill to rotate; it does not have to withstand any appreciable torque so long as the bearings are in normal working order. To engage with it, the stud which forms the pivot for the fine feed wormshaft is turned down to ¼ in. dia. and projects through the inside wall of the housing for a distance of ⅛ in. You may therefore check the location of the keyway in the quill by marking through the stud hole with the rack teeth in their working position. I end milled the keyway by using the milling spindle on the vertical slide.

This is the spindle drive

In assembling the spindle in its bearings, a dust excluding washer is first pressed on, against the collar of the spindle, before the lower ball race is fitted. This washer is shown in place in the assembly drawing on page 319 of the May 1 issue. It may be made in steel or light alloy sheet, bored to fit closely on the spindle, with a radius or chamfer on the underside to clear the fillet on the shoulder of the spindle, and relieved on the upper face to prevent rubbing on the outer race. After assembling both ball races, adjust them endwise by the spindle nuts, so that all end play is eliminated and slight friction can be felt. Overloading must be avoided. The nuts are then locked tightly against each other; it is worth while to make a pair of C-spanners in ¼ in. mild steel.

The pulley bearing is in the form of a steel sleeve mounted on a square-flanged end cap, which fits on the top face of the quill housing, registered truly by a spigot on the underside. If preferred, the sleeve may be screwed into the cap instead of being shrunk in; the important thing is that it must be in true concentric alignment with the spindle when the cap is bolted down. For this reason, you may do the final machin-

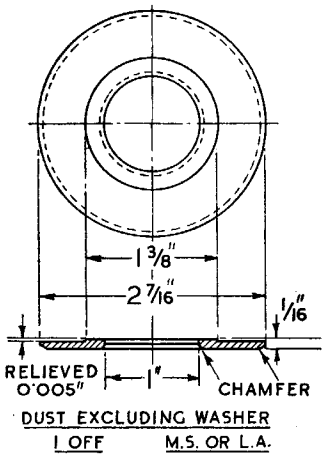

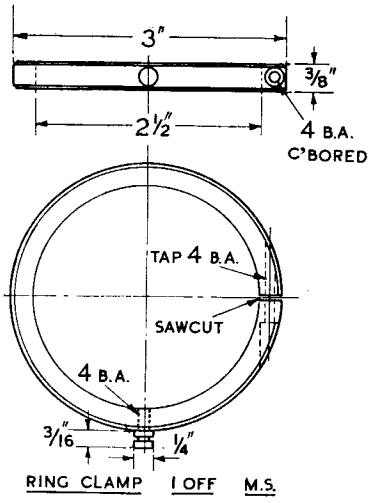

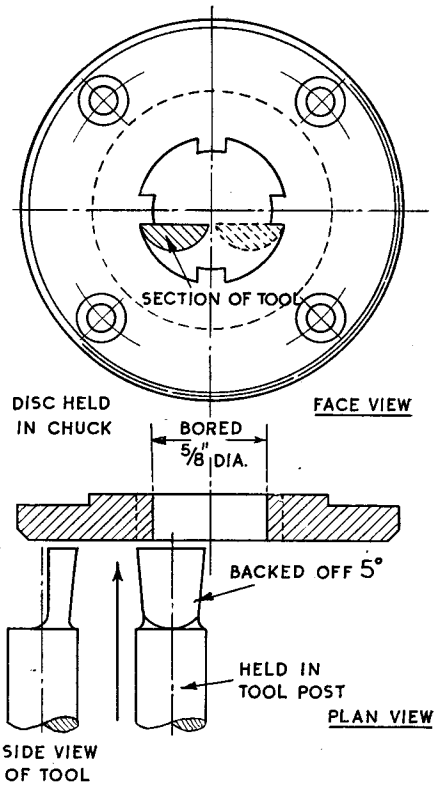

METHOD OF SHAPING SPLINES IN THE LATHE

ing after fitting the sleeve permanently to the cap by locating from the bore on a mandrel, and skimming the outer surface, and also the register spigot, at the same setting.

A ready-made four-step pulley casting in light alloy can easily be adapted as the spindle drive; it will bore out to take the bush which forms the actual bearing surface. The bush is of sintered bronze, which is porous and when impregnated with oil will furnish all the necessary lubrication for a long period. It should *not* be drilled for oil feed, but the hole originally drilled in the pulley for the grubscrew may be used to replenish the oil supply to the *outside* of the bush only. Standard pulleys cannot be relied upon to be true all over; they should be carefully checked and given a light skim over the grooves and other surfaces to correct any errors. Their balance may also be capable of improvement; this applies also to the motor pulley, which is a replica of the pulley on the spindle except that the bore is not opened out or bushed. Both pulleys may be statically balanced by being mounted on true mandrels and rolled on knife-edges or carefully levelled steel rails.

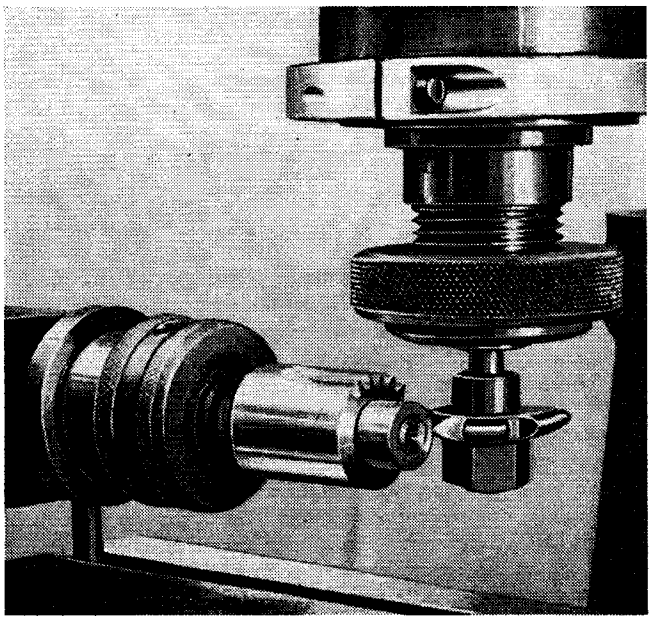

Cutting the feed pinion on the finished machine

The groove in the top end of the sleeve is intended to take a spring circlip, with the object of preventing endwise movement of the pulley when it is fitted. This may not be considered absolutely necessary, as the pulley seats itself by gravity and the belt also tends to maintain correct alignment. Upward movement of the pulley can take place only if the splines of the driving disc (shown on page 319) tend to bind in the keyways. But if the circlip is fitted, some means of removing it, to allow the pulley to be removed, must also be provided. The simplest way is to drill a 3/16 in. hole in the top of the pulley to permit a chisel-pointed rod to be inserted in the joint of the circlip so that the circlip can be expanded enough to be extracted from the groove.

Shaping the splines

It will be seen that the driving disc is spigoted to register in the top end of the pulley bore, and is held in place thereon by four socket-head 4 BA screws. Its internally-splined bore may present some difficulty, as it cannot be produced by simple machining methods unless we have a slotting machine or a suitable broach. Careful filing, to witness circles on both faces of the disc, can be employed; the circular parts should have clearance on the spindle, and only the splines need to fit in the keyways. I did the work in the lathe, using a half-round slotting tool with its flat face upwards, and set 1/16 in. below lathe centre. The lathe mandrel was indexed in four positions, and by rocking the saddle backwards and forwards I shaped the sides of the splines back and front, at one setting. To remove the rest of the surplus metal, I inched the mandrel round and carried on the shaping with a round-nose slotting tool.

This form of drive may tend to be somewhat noisy when the splines on the keyways of the spindle become slightly worn. I have considered making the disc out of laminated composition such as Tufnol, increased to about twice the stated thickness to give greater strength and bearing surface on the splines. Note that any extra space taken up here reduces the maximum feed movement of the spindle, unless the length of its extension is increased to correspond. This applies also to the fitting of a stop collar (page 319) on the end of the spindle, but the collar can easily be removed when full movement is required. It is useful for many operations in drilling and milling to a specified limit of depth.

The ring clamp, for the lower end of the quill, is used for anchoring the tension spring when this method of carrying the weight and returning the quill is employed. It is bored to a push fit on the quill, and before splitting it through you should drill and tap the hole for the clamping screw. To start the drill, an end mill is fed in sideways to form a flat seating, as indicated by dotted lines in the plan views. The spring, which is like that used in muscle developers, is anchored between a grooved screw in the ring, and another in the top flange of the quill housing. Its position is really immaterial, but it may well be placed close behind the projecting strip on the side of the housing, as seen in the pictures of the complete assembly. If you object to the appearance of the exposed spring, you can enclose it in a light sheet metal casing attached to the side of the housing. But the vertical strip on the casting which is finished parallel to the spindle axis, should be left exposed to help the checking of spindle alignment.

To be continued

BOXHILL...

Continued from page 443

down, but three push-fit pins with dummy hexagon heads are provided at each end, so that the hand pump can be brought into action very quickly.

Elbows are also fitted to the bottom rear corners of the tanks to carry the balance pipes, which are bent up from thin-wall copper tube $\frac{5}{16}$ in. dia. For easy filling, air vents must be fitted to both side tanks, as well as to the bunker tank. Separate air vents are not shown; a small air hole could be drilled through each of the "condenser" pipes on the top front end of the tanks.

By-pass valve

The right-hand tank has an extension 1 in. long, protruding into the cab at the side of the firebox. To this the water by-pass valve is fitted. It is arranged far enough away from the inside of the cab side to allow its handle to clear it and is screwed into the rear plate of the side tank, which is thickened up locally to take more threads. The water filler on this tank contains a filter made from fine copper petrol gauze and soft-soldered to a ring, a loose fit in the filler recess. Thus you can remove it quickly for cleaning by inserting one finger and lifting it straight out.

At the front of each tank, a short length of $\frac{1}{4}$ in. brass angle is attached. About five 8 BA screws can be put through it, into the running board, the screws passing through into the footplate bracket beneath. A strap (not shown in the drawings) should be put right across the boiler and the two side tanks, to keep the tanks quite rigid. It can be of hard brass or nickel-silver strip $\frac{3}{16}$ in. $\times$ $\frac{1}{32}$ in., and its best position is just ahead of the dome. Hexagon-head screws should be used, about 8 BA, and once again the top sheets should be thickened locally to receive them. The strap must, of course, end short of the removable panel on the top of the left-hand tank. Even so, there should be plenty of room for three screws in each tank.

To be continued

Light vertical MILLING MACHINE

Continued from June 15

by Edgar T. Westbury

Now for the FEED GEAR

THE assembly of the quill feed gear is shown in side and rear elevations, sectioned on the centre line of the wormshaft bracket and pinion housing. Taking the main or coarse feed first, the pinion shaft is carried in a flanged bush at one end and a light steady bush at the other. The bushes are both turned to fit the bore of the housing. In normal circumstances they are bored concentrically, but sometimes eccentric bores may be required to adjust the meshing of the pinion with the rack, as will be explained later.

I regret that the centre location of the main feed shaft was incorrectly dimensioned on the detail drawing of the housing, especially as it is important that the bore in which the bearings of the pinion are fitted should be correctly located to set the pinion in proper mesh with the rack cut on the quill. But the error in the dimension is so obvious that no constructor will have been misled. The correct centre distance is given here in the scrap section showing the rack and pinion in engagement.

The pinion, which has a blank diameter of $\frac{7}{8}$ in., may be made in bronze or cast iron. It has 20 teeth, $\frac{1}{8}$ in. circumferential pitch, with a tooth depth of 0.075 in. I have departed from diametral pitch standard, to simplify the pitch measurement of the rack, and to facilitate indexing on the worm-geared fine feed control. Thus, one complete turn of the pinion represents $2\frac{1}{2}$ in. vertical travel on the quill; with the fine feed shaft geared to 50:1 reduction, one complete turn of the worm gives 2,500/50, or 50 thousandths of an inch movement. The wormshaft handwheel, graduated in 50 divisions, will therefore measure 1/1,000 in. increments.

The teeth of the pinion are not cut to the full length of the blank, but are run out about $\frac{3}{8}$ in. from the end, the object being to leave sufficient thickness of metal for the tapped hole which takes the grub screw. There is no advantage in making the pinion teeth any longer, as they mesh with convex rack teeth and the area of contact is therefore very limited. The distance between the bushes of the pinion shaft allows the pinion to be adjusted endwise, so that if any wear of the teeth takes place it can be shifted to a fresh position. By cutting the teeth slightly on the taper you could also compensate any error in meshing, or take up backlash caused by wear.

If you happen to have a pinion of the correct pitch and approximate dimensions, you may be able to adapt it for this purpose, though some alteration may be needed to the shaft centre position. The best way would be to fit eccentric bushes at both ends, to adjust the shaft position by rotating them as required, and then to lock them in position with grub screws. The object of the groove in the steady bush is to enable it to be held by a single grub screw in the housing, without risk of bruising the finished surface.

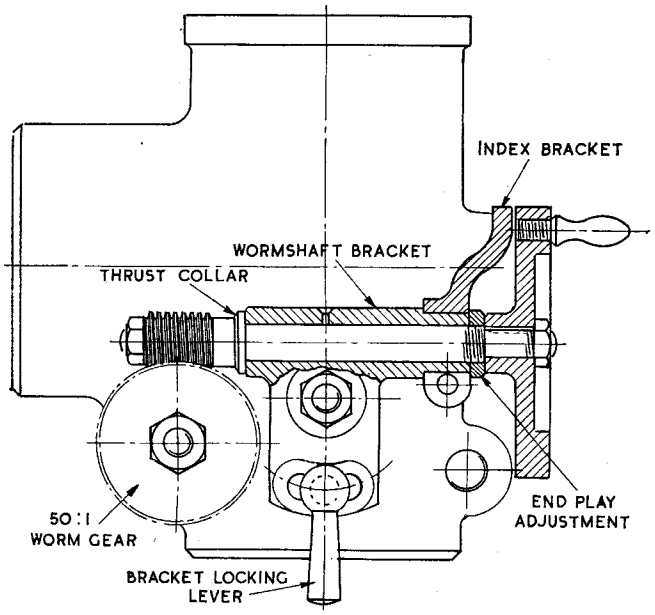

ARRANGEMENT OF FINE FEED GEARING

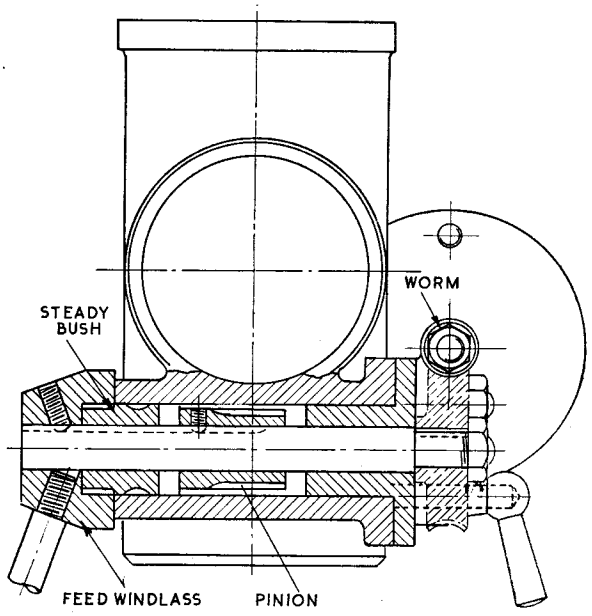

SECTION OF MAIN FEED GEAR FROM REAR SIDE OF HEAD

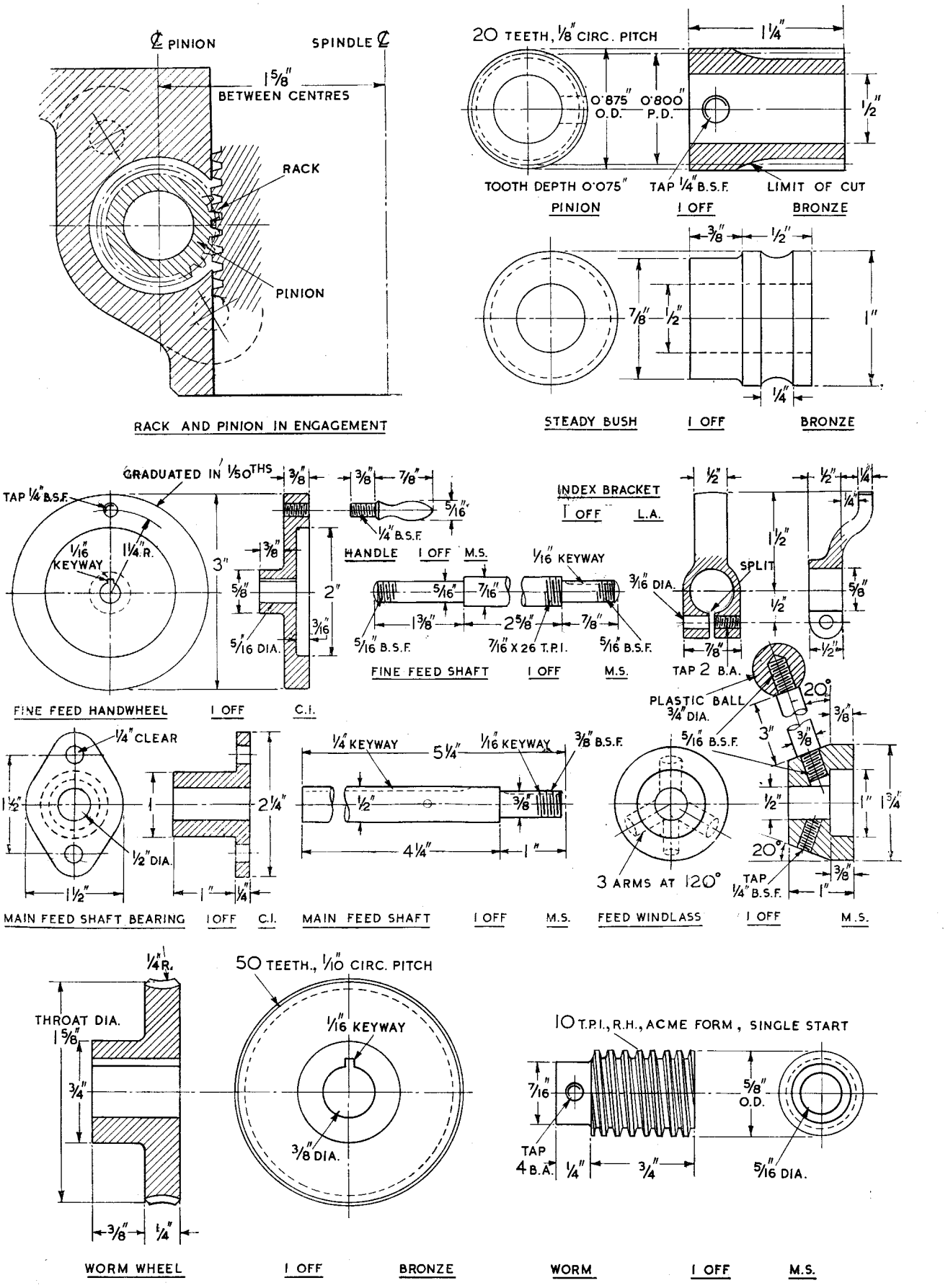
℄ PINION
SPINDLE ℄
1 5/8" BETWEEN CENTRES
RACK
PINION
RACK AND PINION IN ENGAGEMENT
20 TEETH, 1/8" CIRC. PITCH
1 1/4"
0·875" O.D.
0·800" P.D.
1/2"
TOOTH DEPTH 0·075"
TAP 1/4" B.S.F.
LIMIT OF CUT
PINION 1 OFF BRONZE
3/8"
1/2"
7/8"
1/2"
1"
1/4"
STEADY BUSH 1 OFF BRONZE
GRADUATED IN 1/50THS
TAP 1/4" B.S.F.
1/16" KEYWAY
1 1/4" R.
3"
3/8"
5/8"
2"
3/16"
5/16" DIA.
FINE FEED HANDWHEEL 1 OFF C.I.
3/8"
7/8"
5/16"
1/4" B.S.F.
HANDLE 1 OFF M.S.
1/16" KEYWAY
5/16"
7/16"
1 3/8"
2 5/8"
7/8"
5/16" B.S.F.
7/16" X 26 T.P.I.
5/16" B.S.F.
FINE FEED SHAFT 1 OFF M.S.
INDEX BRACKET
1 OFF L.A.
1/2"
1/2"
1/4"
1 1/2"
SPLIT
3/16" DIA.
5/8"
1/2"
7/8"
1/2"
TAP 2 B.A.
PLASTIC BALL 3/4" DIA.
20°
3/8"
3"
3/8"
5/16" B.S.F.
1/4" CLEAR
1 1/2"
1
2 1/4"
1/2" DIA.
1 1/2"
1"
1/4"
MAIN FEED SHAFT BEARING 1 OFF C.I.
1/4" KEYWAY
5 1/4"
1/16" KEYWAY
3/8" B.S.F.
1/2"
3/8"
4 1/4"
1"
MAIN FEED SHAFT 1 OFF M.S.
3 ARMS AT 120°
1/2"
1"
1 3/4"
20°
TAP 1/4" B.S.F.
3/8"
1"
FEED WINDLASS 1 OFF M.S.
1/4" R.
THROAT DIA. 1 5/8"
3/4"
3/8"
1/4"
50 TEETH, 1/10" CIRC. PITCH
1/16" KEYWAY
3/8" DIA.
WORM WHEEL 1 OFF BRONZE
10 T.P.I., R.H., ACME FORM, SINGLE START
7/16"
5/8" O.D.
TAP 4 B.A.
1/4"
3/4"
5/16" DIA.
WORM 1 OFF M.S.

The pinion at first fitted to my machine was cut by the milling spindle in the lathe, with a 40-tooth change wheel to index the blank. A fly cutter, shaped as closely as possible to the correct tooth form, was used to form the teeth. This pinion worked fairly well, but after the machine had been finally assembled I borrowed a cutter of correct pitch and form and made a new pinion on the milling machine itself, using the cutter on an arbor in the collet chuck. The bronze blank was mounted in an improvised indexing fixture, and after fixing it to the machine table I adjusted the cutter to the exact height of the blank centre, and locked the quill by the clamp bolt. As the photograph on page 454 (June 15) shows, simple gearcutting operations, or any others which involve indexing, can be carried out on this machine just as easily as on more orthodox horizontal spindle millers.

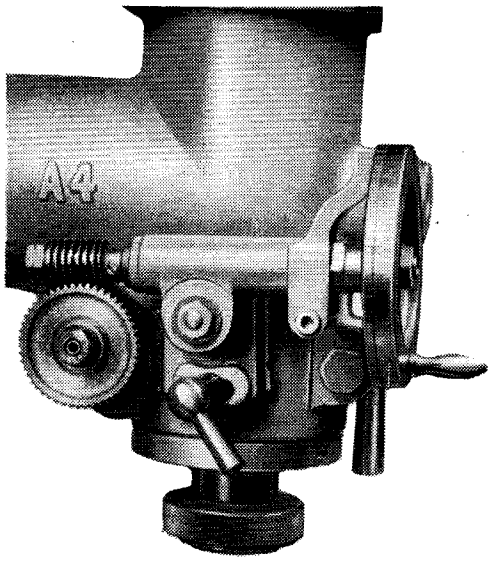

Left: View of spindle head showing the worm gear in engagement. Right: The worm gear disengaged and the sensitive feed in use

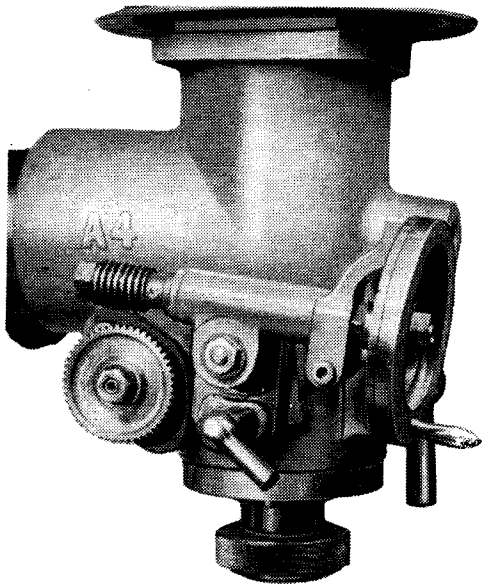

The flanged bush which forms the bearing for the main shaft may be held over the edges of the flange in the four-jaw chuck for external and internal machining at one setting, and then reversed for facing the outside surface. If you have difficulty in obtaining correct meshing of the pinion with the rack, you may have to bore the bearing eccentrically, or to enlarge the concentric bore and fit an eccentric bush. This contingency will only arise if errors occur in the pinion dimensions, or the centre distance of the bored tunnel for the feed shaft from the spindle axis.

A piece of $\frac{1}{2}$ in. bright mild steel rod may be used for the main feed shaft, so long as it is truly chucked for turning down the end to take the worm gear. This should be a light press fit on the shaft, and may be keyed, pinned or grub-screwed to the shaft, with a nut for further security. A key-way or flat is provided over the major part of the larger diameter so that you can secure both the pinion and the hub of the feed windlass by socket head grub screws, without risk of bruising or otherwise damaging the journal surface.

The windlass for sensitive feed is built up, and comprises a steel hub, with three equally spaced radial arms, each fitted with a ball at the end. After facing and boring the hub, you can mount it on a mandrel for turning the outside, including the 20-degree bevel. To drill the tapping holes for the arms, and the hole for the grub screw exactly perpendicular to the bevelled surface, you should make a simple mounting jig, with a base at 20 degrees, and a spigoted stud to fit the bore of the hub, to fix on an angle plate set up on the lathe faceplate. The seatings for the arms should be counterbored just enough to allow the shoulders to screw right home, and not leave an unsightly gap at the sides. This applies also to the fitting of the plastic balls, which are usually obtainable ready drilled and tapped, but may require some attention to give a neat fit.

As the hub of the windlass provides endwise location for the main feed shaft, a dummy collar may need to be provided, if it becomes necessary to remove the windlass during milling operations, in which it may cause obstruction. This does not occur in any of the operations so far encountered. But to anticipate the possibility, a slight modification may be made to allow a collar to be fitted permanently behind the hub, or in its back recess. End location is essential to cope with the slight thrust produced by the worm gear, and to prevent the error in the feed measurement which might be caused by its movement.

The fine feed shaft, or wormshaft, is turned down at both ends, and screwed $\frac{5}{16}$ in. BSF, to carry the worm at one end and the feed handwheel at the other. Both components must be keyed or otherwise positively fixed against rotation. End play of the worm must also be taken up. This is provided for by a thrust collar behind it, and a check nut on a $\frac{7}{16}$ in. fine thread at the remote end of the major diameter. The nut is locked by the boss of the handwheel, when the wheel in turn is secured by its end nut.

A ready-made worm and wheel are available for the fine feed gearing; their major dimensions are shown in the drawing. This was the only worm and wheel of convenient size which I could get, and a somewhat larger pair would have been more in proportion to the rest of the gearing. But the duty it performs is not at all heavy, and it works quite satisfactorily. If a worm and wheel have to be specially made, the pitch of the worm may be increased to 8 t.p.i. and the wheel enlarged to $2\frac{1}{16}$ in. throat diameter, $\frac{1}{8}$ in. circumferential pitch. Other dimensions need not be altered, though the angle of the wormshaft, in the engaged position, will be different unless the bracket pivot and locking lever are moved about $\frac{3}{16}$ in. higher than is shown on the spindle head detail drawing (April 15).

The handwheel should be machined all over. To ensure truth of all the essential surfaces, it may first be held by the

Continued on page 494

This success set the seal on Foden fame. Eventually, in order to keep up with orders for wagons, the firm had to cease making traction engines and road locomotives, although steam tractors, based on the wagon, continued to be built.

In 1929 the far-seeing William Foden proposed the design of a diesel lorry, and in 1931 the vehicle went into production—fortunately, for legislation had been introduced which virtually killed the road steamer stone dead.

Today Fodens Ltd is the largest independent family business making commercial vehicles, marine engines, mobile cranes, huge dump-trucks and the like. It is a fitting memorial to William Foden, who was its "guv'nor" for so long, and who was borne to his last rest on one of his beloved steam wagons.

W. J. HUGHES.

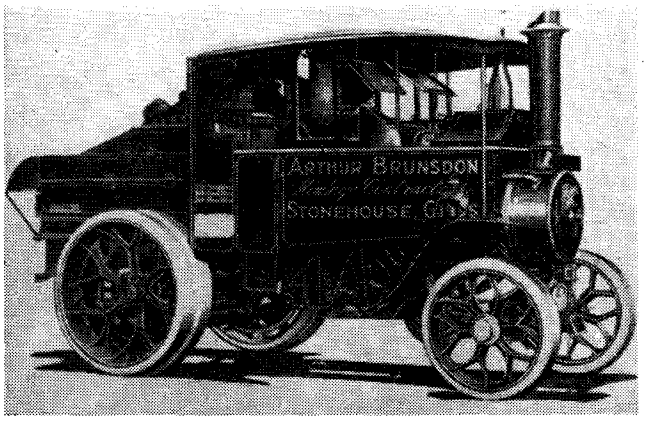

A Foden tractor of 1928

MILLING MACHINE Continued from page 474

boss for facing and recessing the front and rough turning the outer edge. For turning the back, drilling the central hole, and finishing the edge, it may be held by the inside of the recess. The keyway here, and in other components, can be cut with a slotting tool of correct width, set exactly on centre height, while the work is still set up for machining.

You can also mark the graduations on the edge at the same setting, using a 50-toothed change wheel on the tail-end of the mandrel for indexing, with a spring plunger or other positive form of detent—not a click spring or a similar makeshift device. The procedure is the same as for the slide feed screw indices.

The handle is turned from $\frac{5}{16}$ in. steel rod, first reduced and threaded on the end and then roughly shaped on the rest of its length before it is parted off. A short piece of scrap rod, drilled and tapped truly central in the chuck, may be used to hold the handle for finishing it neatly to shape. The finishing is best done with hand tools, which should be kept keen, and supported on a T-rest or the reverse end of a tool shank, slightly below centre height and as close to the work as possible.

Lubrication by soluble or straight cutting oil is essential. I find that many turners fail to make a neat job of parts which involve contours like this, with sweeping concave and convex curves. Often the shape, such as it is, is produced mainly by filing. It is worth while to put in a little time practising with hand tools, which are very useful for many operations, as a supplement to slide-rest tools.

The detail drawing of the wormshaft bracket was published on page 320 (May 1). It should first be machined on the flat mounting face, drilled for the pivot stud and then clamped to an angle plate by this face, and set up to centralise the cylindrical part for the drilling, reaming and turning of the outside to take the index bracket. The reverse end should then be faced truly to form a seating for the thrust collar.

As already mentioned, the pivot stud for the bracket is turned down on the inner end to engage the keyway in the quill, and prevent it from rotating. The major diameter of the stud is adjusted for length to allow the bracket to swing freely on it with minimum end play, when we fit the nut and washer. An accurate slot is cut in the bracket at a radius of 1 in. from the pivot stud, wide enough to clear the plain $\frac{1}{4}$ in. stud to which the clamping lever is attached. The raised facing around the slot should be filed or end-milled parallel to the back face.

To be continued

BOXHILL Continued from page 482

brass or copper tube, arranged close to the left-hand cab side-sheet. Its top should be plugged, and a hole about $\frac{3}{32}$ in. dia. drilled in the side of the tube near to the cab side, and just below the plug. This prevents dirt, coal-dust and so forth from getting into the tank, while allowing free access to the air.

The next part to make is the back of the bunker. It has to be cut away in the centre to clear the toolbox. To hold it in position, put three 8 BA countersunk screws through the plate, into tapped holes in the angle which have been fitted permanently to the sides of the bunker. Do not solder it in any way, as this would prevent the tank unit from being lifted out for cleaning and so forth.

Our footplate—by which I mean the wooden boarding on which the enginemen stand—is best made of brass for a working model, scribed heavily to represent planking, and suitably painted in dead flat colours. The various cutaways shown on my drawings can be checked off on the work itself, as the exact lie of the various pipes can never be determined exactly in advance. Most builders will probably make a second footplate in wood, exactly as in the full-size engine, and use it when the model is not being steamed, and for exhibition. A dark wood looks best, with as small graining as can be found.

After the rear spectacle plate has been made up and fitted —and this plate must be made readily removable for driving —the only remaining piece of platework is the roof. The shape of the roof is a difficult one. I think that the best approach is to use $\frac{1}{16}$ in. thick copper and make up a simple press tool in hardwood, such as beech or oak.

This press tool would consist of two parts, the punch and the die, together with a substantial dowel in each corner. The copper sheet is then thoroughly annealed and placed between the two parts of the tool, which are squeezed together by the vice. While this method should work all right, it is possible that a skilled sheet metalworker may be able to suggest a quicker method.

So that the roof fits nicely between the cab sides and the spectacle plates, lengths of $\frac{5}{32}$ in. brass angle are soldered in position as shown. A flat bead of $\frac{3}{16}$ in. $\times$ $\frac{1}{32}$ in. brass strip across the middle completes this component. If the fit of the roof is a good one, there should be no need for more positive fixing: most drivers will be able to manage without removing the roof.

To be concluded

Light vertical MILLING MACHINE

Continued from July 1

By Edgar T. Westbury

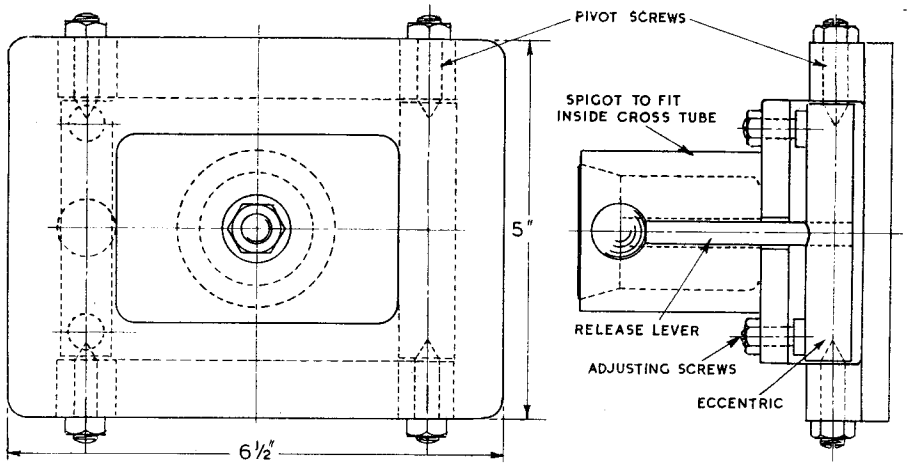

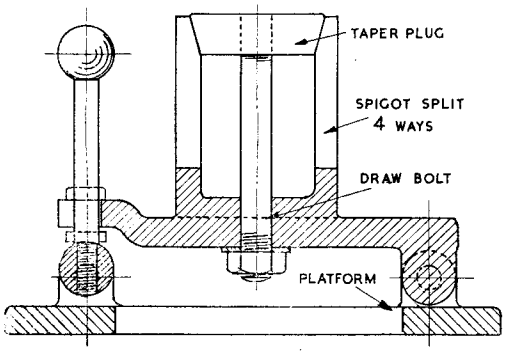

MOTOR MOUNTING BRACKET ASSEMBLY

HERE ARE SOME A

An adjustable index bracket is clamped to the boss of the wormshaft bracket so that the graduations on the handwheel can be easily read from any working position, it is bored to a close fit on the boss, drilled and tapped for a 2 BA clamping screw, and split through the lug. It needs only to be filed on the edge of the arm, to the same radius as the rim of the wheel, and incised with a fine knife-edge file to form the index mark.

The entire wormshaft assembly swings on the pivot stud for engaging or disengaging the fine feed gear and is locked in either position by the hand lever. You might find it an improvement to provide pre-location in two positions for the bracket, possibly by using a spring-locking device, but it is important that the worm should engage fully, without backlash, to give accurate indexing.

My description would not be complete without some reference to the mounting of the driving motor, though this is not necessarily a component of the machine itself, and is subject to considerable modification. For operating on a.c. mains in Britain, I recommend a standard ¼ h.p. split-phase induction motor, preferably a capacitor-start, of 220-240 v. 50-cycles, running at 1,425 to 1,450 r.p.m. But different makes of motors conforming to this specification vary widely in shape and size, including their diameter and length, the position of mounting feet and their longitudinal relation to the output shaft. To be adaptable for all types of motor, the mounting bracket would have to be larger and more cumbersome than it need be to fulfil its simple purpose.

The motor first fitted to the machine was of the flange mounting type, and the mount had to be in the form of an angle bracket. This was attached to a spigot turned to a push fit in the bore of the cross tube and secured by a bolt passing horizontally through its diameter. Slots in both sides of the cross tube gave some latitude for adjustment of belt length and tension. For the more usual foot-mounted motor, a flat plate attached to a spigot and fitted to the cross tube in the same way would fulfil the basic requirements, and would probably satisfy many. But it lacks any provision for quick release of belt tension when we change speed by shifting the belt from one position to another. While it is possible to spring the belt over the pulley rims, this is liable to stretch it permanently and shorten its life, apart from the extra effort required.

Motor attachment

A form of motor attachment which provides both for quick release and tension adjustment is shown in the drawing. The dimensions given for the motor platform, 6½ in. × 5 in., will accommodate several types of standard motor, with some latitude for vertical location for pulley alignment. The two main parts are intended to be in the form of light

alloy castings, though they could be fabricated in steel by welding or brazing.

The bracket has a hollow spigot which should be turned to a close push-fit in the bore of the cross tube, and is bored at the mouth to a taper of 30 deg. inclusive. It is then split four ways for about half its length, and fitted with a taper plug and draw bolt so that it can be expanded to a secure fit inside the tube. The rectangular flange of the bracket has a projecting lug at one end, centre-drilled at top and bottom to fit the hinge pivots, and is set back at the other extremity to take the two adjusting screws. These have plain round flat heads and are fitted with locking nuts. The motor platform is simply a flat plate which has an aperture in the centre to economise metal and reduce weight (an optional feature) and is provided at the back with four lugs, each drilled and tapped for pointed screws, which are also fitted with lock nuts.

Tension is released by a short bar, centre-drilled eccentrically at each end to fit the points of the pivot screws, and cross-drilled and tapped at the middle to take the hand lever. In the plan view, the lever is at right angles to the motor platform, with the eccentric bearing against the heads of the adjusting screws to maintain normal belt tension. When the lever is turned outwards, to just over a right angle, the platform is free to move closer to the bracket and thus loosen the belt. No provision is made for preventing the platform from swinging away from the bracket, as this can happen only if the belt is completely removed. A simple limiting device can easily be added.

For working with normal right-handed cutters of any type, the top end of the machine spindle—and also, of course, the end of the motor spindle—must rotate in a clockwise direction. A reversible motor is not necessary, unless left-handed cutters are to be used, in which event you would be wise to make some provision to prevent the collet chuck cap and other screwed fittings from working loose. If the motor, as originally made, runs in the wrong direction and is not intended to be reversible, we must find the ends of the main and starting windings and reverse them *in relation to each other*.

The milling machine, in its basic form as described and illustrated, is of course capable of being improved and elaborated. One addition which many will consider worth while is a guard or enclosure for the driving belt; in a machine intended for industrial use this would be regarded as an essential safety precaution. I have not given details, but its design does not involve any great problems. It could easily be made from sheet metal by fabrication or panel-beating methods, and attached to the spindle head and the motor bracket at front and back. For easy removal while changing belt positions, these attachments may be in the form of bent steel angle brackets, to which the guard is fastened by knurled hand-screws.

E ACCESSORIES

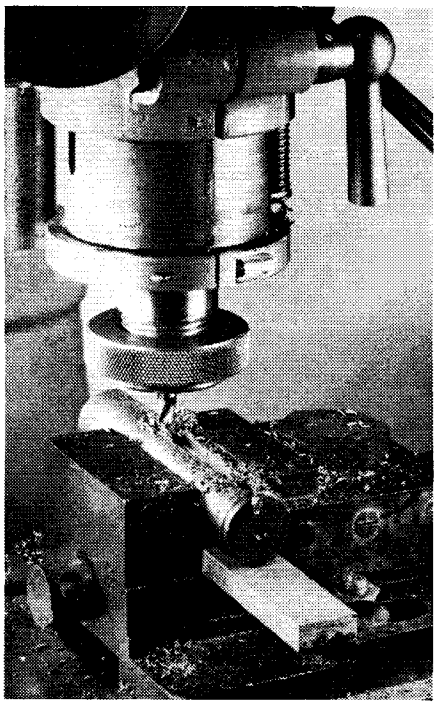

Milling a keyway $\frac{1}{4}$ in. wide × $\frac{1}{8}$ in. deep with a slot drill in a single cut

For accuracy

The possibility of fitting an index to the cross member, to show the angular position of the spindle head, will undoubtedly occur to many, but it is not as easy as it looks to devise a practical fitting of this kind which will be effective at all extensions of the head. A ring, indexed radially in degrees, could be attached to the front end of the cross tube, and a straight line incised along the cross tube would indicate angular settings against it. But in view of the relatively small diameter of the tube, the accuracy of indications provided in this way, at the much greater radius of the spindle nose or cutter, would not be very great.

Undoubtedly most of the work done on this machine will call for vertical setting of the spindle, and the need will be evident for some way of providing accuracy. One of the simplest and most positive means is to make or adapt a try-square with specially long blade and stock, which will rest on the surface of the milling table and register against the vertical strip on the right-hand side of the spindle head. The same idea can be applied to adjusting angular settings, by making a protractor with similar long limbs, or adapting the protractor from a large combination rule set. The check should be made over as great a length of surface as possible, on both the table and the spindle head.

Angular settings

The difficulty of adjusting angular settings accurately is not as great as we may think. For instance, it has been put to me that if we need to alter either the height or the radial extension of the spindle head, we must make a complete re-check of the spindle angle and lateral alignment—a tedious business. But there are many simple aids which can be used to eliminate the need for re-checking. For instance, in moving the spindle head in any plane, we can maintain, or return to, the previous spindle location by fitting a true-running dummy mandrel in the collet chuck and registering it against a straight test strip bolted to the machine table or held in the chuck in a true lateral or cross plane.

In the milling of flat surfaces with a broad cutter, it is often an advantage to set the spindle head slightly out of the vertical plane—only a mere fraction of a degree—so that the

cutter penetrates deeper on one side than the other. This relieves cutting load, and often makes it easier to produce a good finish on difficult material. The same principle is often employed in surface grinding on vertical spindle machines. Inspection of the surface of the work, after you have taken a light test cut with an end mill, will give you a good indication of the vertical accuracy of the spindle; if the cutter wipes out its own footmarks, so to speak, the error is very small indeed.

Machine vice

The most essential accessory fixture for a milling machine is a good machine vice which can be bolted securely to the table and will hold work with reasonable accuracy. There are several kinds which can be bought ready-made at reasonable prices. The lugs or bolt-holes for securing the vice should be located so that bolts can be fitted to the T-slots in the table, which are 4 in. apart. Separate clamps or straps are needed for holding many work-pieces, but when applied to holding down a vice they are an encumbrance and sometimes a nuisance. If the vice can be located by tongues or dowels in the T-slots, so that the jaws are lined up truly in the lateral or square position, it is all the better, though it should also be capable of being set at an angle on the table when required. Swivelling vices can be obtained which will hold work at almost any angle, but they are generally less secure than the plain type, and a good deal more expensive.

The size of vice required will obviously depend largely on the work to be carried out, but it is a mistake to suppose that because we have plenty of room on the table a vice of a size to take full advantage of it is the best possible choice. Small and inexpensive vices, such as those in the Myford range of accessories, are extremely useful within their limited capacity, and quite reasonably accurate. Hardened jaw inserts are not always an unqualified advantage, though they undoubtedly help to maintain accuracy over a longer working period than soft iron or steel jaws. Horizontal or vertical V-grooves in the jaws are a great aid to security and accuracy in holding round stock, and shallow steps in the jaws are useful for holding sheet or strip material.

The vice shown is one which I have had for many years; it was originally obtained at a club jumble sale (maker unknown, probably amateur), and improved in detail design and accuracy. Its jaw width and opening capacity are 2¼ in. × 1 in. depth, and it has been capable of holding most of the work which I have so far encountered. The rear (moving) jaw has been fitted with side cheeks which guide it in true parallel motion, and with a large stud and nut which can be used to clamp it down firmly after the jaws have been tightened on the work in the usual way. This counters the prevalent tendency of the jaw to lift, which often results in impairing the accuracy of work despite care in setting it truly. All four edges of the baseplate have been squared up so that it can readily be located on the machine table.

To be continued

NINE CORNISH MAIDENS . . .

Continued from page 507

Suddenly a head appeared from above the organ pipes. A man gave me a grin and a nod as if expecting us. Then he vanished, to appear again.

"Ay, she's a beauty isn't she?" he said in a Cornish accent. "Bought her for fire-wood I did, five years ago up in Hampstead at the Fair. Just a heap of junk she was then.

"The wagon she was in leaked like a basket. Look, I'll show 'ee the state of her." Mr Jonas led me across the yard to another workshop, littered with huge parts of traction engines, decorative parts of showman's engines, motor cycles of the early 1900s, organ pipes and all the paraphernalia of a workshop of half a century ago.

At one end was a pile of strips of wood from the old organ pipes. "We brought it in by the barrow-load, one wheelbarrow-full after another," he said in the matter-of-fact way that his Cornish forebears might have described their clearing of a wreck. "We dried it out and went around old furniture sales and brought up furniture to get the right kind of seasoned wood for new pipes. Some of the register boxes had to be rebuilt and I had to make up new brass valves for the key frames.

"Now she's got bass, trombone, baritone, cello, violin, bass drums, side drums, kettle drums, castanets and cymbals. There's a lot more to be added. We want to fit bells some time—for carols, y'know. They'll go up in front."

"Are there nine maidens?" I asked.

"Them? Oh yes, nine. Look, here's the other two." He led me to another shed, piled with parts of engines and organs. There they stood on their pedestals, even more voluptuous than the others. White-skinned, red-lipped and golden-haired, they gleamed in their fresh paint.

I asked Mr Jonas, farmer, repairer of agricultural machinery and haulage contractor, if he himself played an instrument. "Oh yes," he said, "I play most things. But I've never had a lesson, y'know. Just by ear."

He took two organ pipes and blew them together with his mouth. "These two are in G and one's exactly an octave above the other. You've got to get them tuned exactly and you can only do that by ear."

Spares? "Oh, the best place is the Continent. Amsterdam I get some of the music from. There's a more lively cut to the Continental music—shorter notes and more life. France is the home of the steam organ. Mine was made in Paris for a dance hall."

The organ paused again and started on a new tune with its 1,600 pipes.

A mile and a half later, across a boggy field, we found the Nine Maidens. As in Mr Jonas's workshop, only seven were standing in position. Sadly overgrown and neglected, they were mixed up with derelict farming machinery of the twentieth century. I felt that the Ministry of Works had a lesson in rehabiliation to learn from Bill Jonas. ▣

Light vertical MILLING MACHINE

Continued from July 15

by Edgar T. Westbury

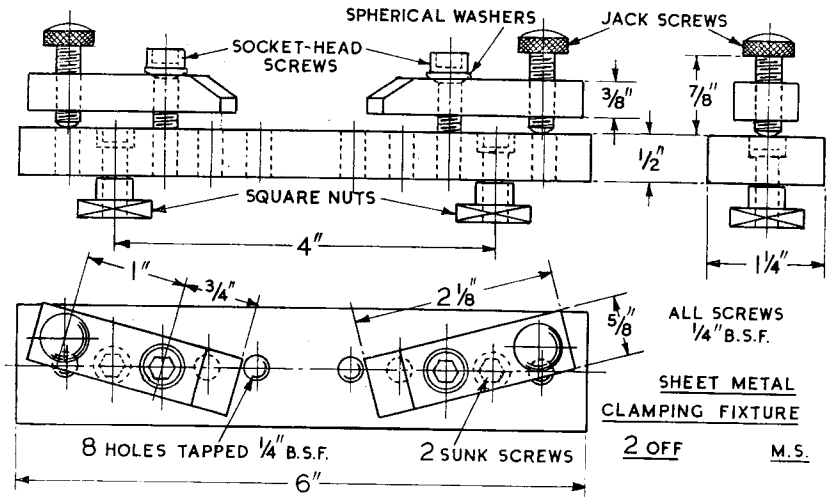

Much can be done with these special fixtures

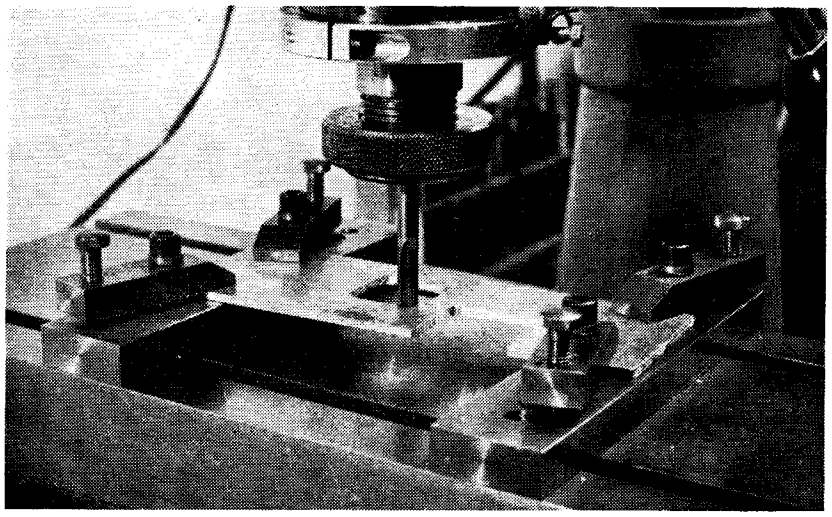

Using the clamping fixture to hold work for the cutting of holes in sheet metal

AMONG the many operations for which a vertical milling machine is well suited, not the least important is shaping, piercing and recessing sheet metal of any thickness, and of a size up to the full capacity of the table, or even larger. On several occasions, I have successfully undertaken the trepanning of large holes in steel panels; this is not only the most efficient method of producing accurate holes of any considerable size, especially in relatively thin material, but is also economical, as the disc of metal removed from the centre is often usable for some other purpose instead of being simply wasted in the form of swarf. I have cut a 3 in. hole in duralumin sheet 1 in. thick by this method, working on alternative sides to half depth.

Profiling the edges of metal sheets, cutting gaps or piercing holes of any shape with slot drills, can also be carried out much quicker than is possible by the use of hand tools. A pair of frame plates for a 3½ in. gauge locomotive in ⅛ in. steel plate, bolted together, have been shaped in this way, and stacks of thinner sheet metal, up to half a dozen at a time, have been simultaneously machined.

Holding sheet metal parts on the table of the machine can be difficult, as normal clamping fixtures may be cumbersome, and take up room which can ill be spared. The work, where the cutter must pass right through it, needs to be supported clear of the surface, or on expendable packing, so that there is no risk of your cutting into the table. The sheet metal clamping fixture shown in the drawing is very easily made, and has been found useful for many operations on work pieces varying widely in size and shape. A pair of the sets seen here is normally sufficient, but more can be added to provide support for long pieces which may be liable to sag.

The fixture comprises a substantial bar of a length equal to the width of the table, and a pair of toe clamps which can be bolted down on it in various positions. Spigoted

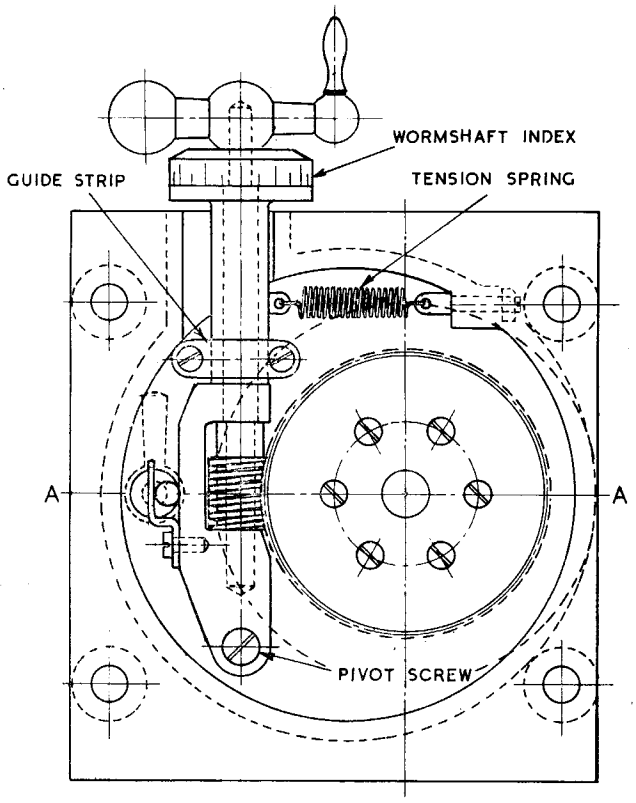

UNDERSIDE PLAN

ROTARY TABLE FOR MILLING MACHINE

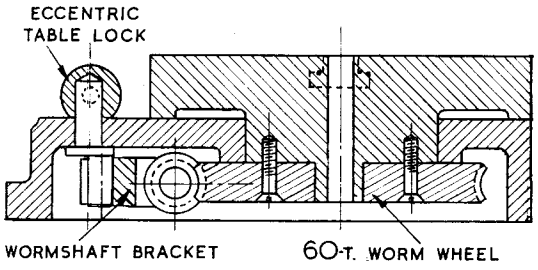

FRONT ELEVATION . SECTION AA

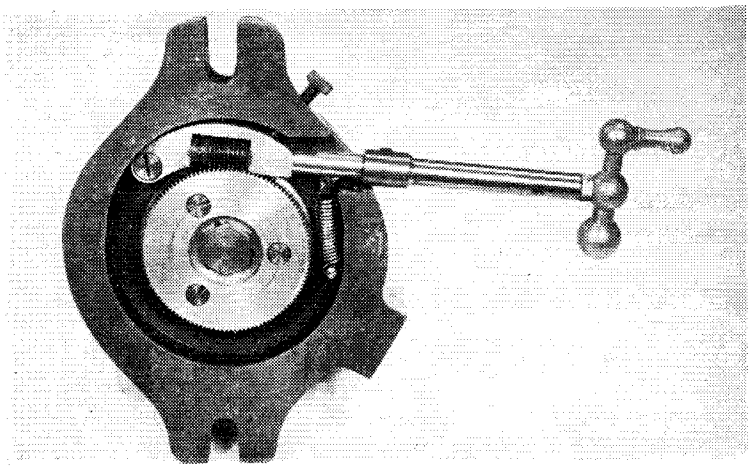

Underside of the rotary table, with the spring-loaded quick-release worm gear

square nuts, of a size which will slide freely in the T-slots of the table, are used with sunk socket-head screws to secure the bar to the milling table. Holes are drilled and tapped in the bar to take the set screws of the toe clamps, which are fitted with jack screws for adjustment to suit the thickness of the metal being held. Spherical-faced washers under the heads of the holding-down screws, fitting seatings of the same shape in the clamp, accommodate any slight tilting movement. The clamps must be set obliquely as shown in the drawing, so that the jack screws bear on unbroken flat surfaces, or must be turned more or less square with the bar and supported on loose packings at the sides of it.

The photograph shows a pair of these fixtures in use,

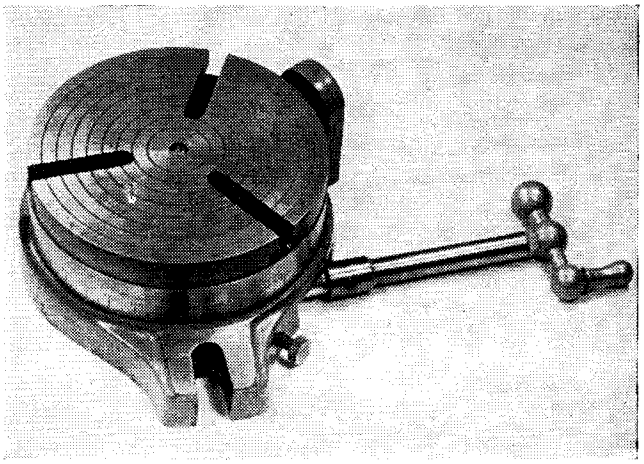

Rotary table, with extension to wormshaft, as in present use

holding a piece of $\frac{1}{8}$ in. Birmabright alloy sheet for cutting a rectangular hole and an openside gap in it. Ordinary end-mills can be used for profiling or gapping, but slot drills must be employed for piercing holes, unless these are started by twist drills. Cutters of about $\frac{1}{4}$ in. diameter, run at the highest spindle speed, are the most suitable; smaller cutters may be used to reduce wastage of metal, or where otherwise necessary.

Operations which call for slotting or recessing or for profiling the arcs of circles can be dealt with most efficiently with some form of rotating fixture. Sometimes the fixture may have to be improvised; a typical example is the milling of curved links for valve gears. Several ingenious devices for carrying out these operations in the lathe have been described in ME, and can easily be adapted to the milling machine with its added facility and convenience.

With horizontal and vertical milling machines the geared rotary table is a standard accessory which may well be considered indispensable for many operations. But the ready-made fixtures are expensive—they may cost almost as much as a complete machine tool—and may not be very handy for fitting to a small milling table. Small and relatively simple rotary tables have been described in these pages, and at one time castings were provided for their construction. I have adapted one of these fixtures, of unknown origin, by fitting a home-made worm and wheel, with means of quick release for coarse movement. The base casting is provided with a lug to take a spring plunger for direct indexing of the table. This would no doubt be very useful for some purposes. I have not needed it myself, and the plunger has

never been fitted. In the form shown in the photograph, the fixture has done much good work on the vertical milling machine, but it is not ideal for the machine in design or as convenient for fitting as it might be. With only two bolting lugs, it must be located diagonally across the table, and fitted with an extension spindle to overhang the side of the table for operating the worm gear.

A new rotary table design

I have redesigned it in a form specially suited to the vertical milling machine, and simplified in construction, with the minimum number of parts requiring precision machining and fitting. It employs a worm and wheel which can be had ready-made, and it retains the quick-release. The base casting has a square mounting flange with four holes positioned to suit the milling table T-slots.

Many of the standard rotary tables and similar indexing fixtures designed for industry are difficult to use on small machines with limited head-room under the cutter because of the excessive height of the table. The extent to which the height can be reduced is limited, because the table must be fairly massive for the sake of rigidity, and the gearing must be sturdy to stand up to heavy torque. Of the few possible ways, the simplest is to extend the wormshaft beyond the width of the table so that it can be set as close as possible to the base, while it is readily operable by an overhung balanced handle or handwheel.

As in the earlier fixture, the wormshaft bearing consists of a bracket which is pivoted at one end on a screw fitted in the underside of the base, and free to swing at the other end for the disengaging of the worm from the wheel. Normally, the worm is held tightly in mesh by a strong tension spring, so that no backlash in the gearing is possible, but an eccentric locking device permits it to be held positively in mesh or in disengaged position. To ensure that the bracket can move only in a horizontal plane, we fit a guide strip to span the extended end of the bracket and allow the required latitude of movement.

The construction of the rotary table fixture is quite straightforward and involves no special machining problems. For the baseplate and table, iron castings should be used; the table is machined all over and must be true on all surfaces. I recommend a gunmetal casting for the wormshaft bracket, but you could fabricate it from rectangular bar by brazing the index disc on the end. Except for the ready-made worm and wheel, all the other components are machined from mild steel stock.

To be continued

They sailed to Bermuda . . .

Continued from page 555

During the week that the Tall Ships were in Lisbon, weather conditions were poor. With a threatening forecast for the day of the start, it was decided that instead of leaving the city on June 4 for anchorages nearer the starting line, all ships should remain at their berths and leave under power early on June 5. The prophesies of bad weather were not fulfilled, and the fleet left the Tagus in brilliant sunshine with a Force 3 breeze which freshened to Force 4 by mid-morning.

The starting line off Cabo Rasco, three miles or so west of the fishing port of Cascais, ran from a lighthouse on shore to a Portugese sloop, the *Bartholomeu Dias,* at the outer limit about four miles off shore. Admiral Americo Thomaz, President of Portugal, radioed the starting signal from the lighthouse to the sloop and the gun for "off" boomed at 1.30 p.m.

Over the line first was the Italian *Corsaro II,* closely chased by the STA entry *Tawau.* Six minutes after the gun, the Portugese barque *Sagres* passed the mark ship to the cheers of her crew. Her white hull and cream canvas, with the traditional red crosses of Christ on her square sails, made an impressive sight.

Three minutes later the *Danmark* crossed the line with the *Juan Sebastian De Elcano,* the *Gorch Fock* and the little *Peter von Danzig* next in line, pitching into the Atlantic swell. The *Libertad, Merlin, Sorlandet* and *Statsraad Lehmkuhl* were the last over the line and were soon disappearing towards the horizon under a press of canvas—an unforgettable sight unlikely to be equalled in European waters.

The race ended for all vessels at 17.00 hours on July 1. After the ceremonies in Bermuda, vessels sailed for New York, where they took part in the Operation Sail review and made calls at United States ports. Most of them were due back in Europe at the end of August. ▣

These were the final placings

Class I:

1. Christian Radich
2. Danmark
3. Gorch Fock
4. Libertad
5. Sorlandet
6. Statsraad Lehmkuhl
7. Juan Sebastian de Elcano

The *Sagres* did not finish.

Class II:

1. Corsaro II
2. Tawau

Class III:

1. Peter von Danzig
2. Merlin

Light vertical MILLING MACHINE

THIS ROTARY TABLE IS SIMPLE AND EFFICIENT

It compares well, says Edgar T. Westbury, with more elaborate fixtures of similar size

Continued from August 1

In machining the baseplate for the rotary table, you must be sure that the top and bottom surfaces are exactly parallel with each other. You should machine the underside first, by holding the casting in the four-jaw chuck. A 6 in. chuck with the jaws reversed will hold it comfortably, and it will swing clear over the bed of a 3½ in. lathe. Only a facing operation is needed, as the inside does not have to be machined, except for the inturned edge of the table seating, which can more conveniently be done later.

If you clamp the casting to the faceplate for machining the top side, its parallel accuracy will be certain provided that the faceplate runs truly. It is set up central with the hole for the table seating, and the hole can be bored at the same setting as the facing operation. To avoid the need for re-setting the casting for facing the underside rim of the seating, you may use an internal recessing tool. The depth of the seating bore is $\frac{7}{16}$ in. as shown, and all machined surfaces should be finished as smooth and true as possible. The holes for the holding-down bolts, and the two smaller holes in the top surface, are drilled and spot-faced, the smaller ones from the underside, and a tangential hole is drilled to take the eyebolt which anchors the tension spring. Two further holes will need to be drilled in the underside, preferably at a later stage.

The table casting has to be machined all over. All the surfaces must be true with each other. You should begin by chucking the casting top face outwards, for roughing this surface and the outer edge, to within about $\frac{1}{32}$ in. of the finished size. The remaining part, including the stalk or pilot, the bearing surface, underside rim and recess, and the centre hole, can then be machined in the reverse position, after the table has been set up as truly as possible by reference to the edge and upper face.

I should explain that the primary object of the centre hole in the table is to serve as a location for centring work which is mounted on the table for milling. A gauge pin may be fitted to the hole, and radial measurements taken from it as required, or it may be used to locate a spigot on a chuck backplate or similar fixture. For some purposes, a much larger register may be required; but where small workpieces have to be dealt with, it is often inconvenient to bore out the centre of the table to any great extent. Sometimes a recess is provided, fitted with a disc which can be knocked out from the back when it is not needed. To ensure the flush fitting of the replaced disc is, however, rather difficult.

Whatever method of centre location is employed, the concentric truth of the hole is extremely important. It should be used as a location point for setting up in further machining operations. A truly centred mandrel, fitted to the hole, may be used to check accuracy in finishing the top surface and edge of the table. A number of concentric circles, at a uniform distance apart, should be incised on the face of the table with a point tool, as a further aid to setting up work on it.

If you have a suitable milling appliance, you can use the lathe to machine the three T-slots in the table. With the spindle set at centre level, the centre channel is end-milled to full width and depth, and followed up with the T-slot cutter. As the cutter must complete its work at one pass, it has to be very rigidly mounted, and fed in radially with due caution. Cutters of this type have a tendency to work endwise if they are mounted in a collet chuck or taper socket, unless you provide some means to prevent it. Home-made cutters, with the sides of the teeth undercut, but not backed off to form cutting edges, are less liable to this fault than the more efficient ready-made ones. The T-slots stop short of the table centre, as shown, unless a register disc is fitted as I have described.

Graduations on the edge of the table are desirable, if not absolutely essential. It is not really difficult to mark them with the aid of a simple indexing gear on the lathe mandrel; the most convenient arrangement is a worm-geared attachment with a ratio of 60: and a division plate with a multiple of 6. If only *direct* indexing is practicable, a smaller number of divisions, with the index on the wormshaft of the rotary table, may be sufficient.

Another possible method is to attach a graduated strip to the edge of the table. When I looked for ready-made strips of the correct circumferential length, etched or engraved in 360 divisions, I was told that they could be supplied in not fewer than 100 lots. If a strip of this kind is used, the edge of the table must be machined to a diameter which just allows the ends of the strip (cut exactly to the 360 mark) to butt together.

The top face of the table may be hand-scraped to check with a precision surface plate, though this is not absolutely necessary for a utility fixture. You can locate the tapped holes in the underside of the register from the clearance holes in the worm gear. As the end-location dimensions of the table are between the underside rim face and the top face of the worm gear, the depth of the register should be such that it comes exactly flush with the bottom edge of the seating when it is fitted. To correct errors, or compensate for wear, you could re-machine the work, or fit shims between the faces of the worm wheel and the register.

If the wormshaft bracket is made from a casting as I recommended, the major operation on it is the boring of the hole for the shaft and the facing of the end flange, which

can be done at one setting in the four-jaw chuck. You may have a little difficulty in drilling the two dimensions of the hole in exact alignment: the use of a $\frac{5}{16}$ in. piloted D-bit, after drilling and reaming the $\frac{3}{8}$ in. portion, will ensure accuracy. The flat top and bottom surfaces of the bracket should not need machining if they are reasonably true, but the inner end of the $\frac{3}{8}$ in. bore should be spot-faced or otherwise machined to form an end-locating seating for the boss of the worm.

If a small lug for the attachment of the tension spring is not provided on the casting, it will need to be fitted on the side of the bracket; it may be made in the form of a screw eye and fitted to a tapped hole, about $\frac{3}{16}$ in. or 2 BA. The hole for the pivot screw is drilled and reamed in the end of the bracket, and counterbored to fit the head of the screw, as shown, on the side which will be *underneath* when the bracket is assembled in the bedplate recess.

The only suitable ready-made worm wheel which I have been able to find is one supplied by Bond's o'Euston Road, and listed as Part No 7/35 in their catalogue; it has 60 teeth, of a pitch equivalent to 20 d.p. Normally, the gear is supplied as a pair, the steel worm being integral with its shaft, but unfortunately it is not practicable to use this unless an entirely different form of wormshaft bracket is employed. It is comparatively simple, however, to machine a separate worm by screwcutting methods.

Another way is to cut off the shaft ends of the standard worm and set the worm up truly for boring and reaming the centre. It should be a tight fit on the shaft, though not so tight as to involve a major problem should it have to be removed later, and it should be taper-pinned or grub-screwed securely.

Needless to say, the worm must run truly if accurate indexing movement is to be obtained. The end of the wormshaft is screwed for attachment of the index collar and ball handle, and also to provide for end play adjustment, so that the worm just works freely without backlash.

The ready-made worm wheel is true in the bore and on the faces, so that no machining is required. It should be a wringing fit on the pilot of the table, for concentricity, and the fixing screws should have ample clearance so that they do not impose

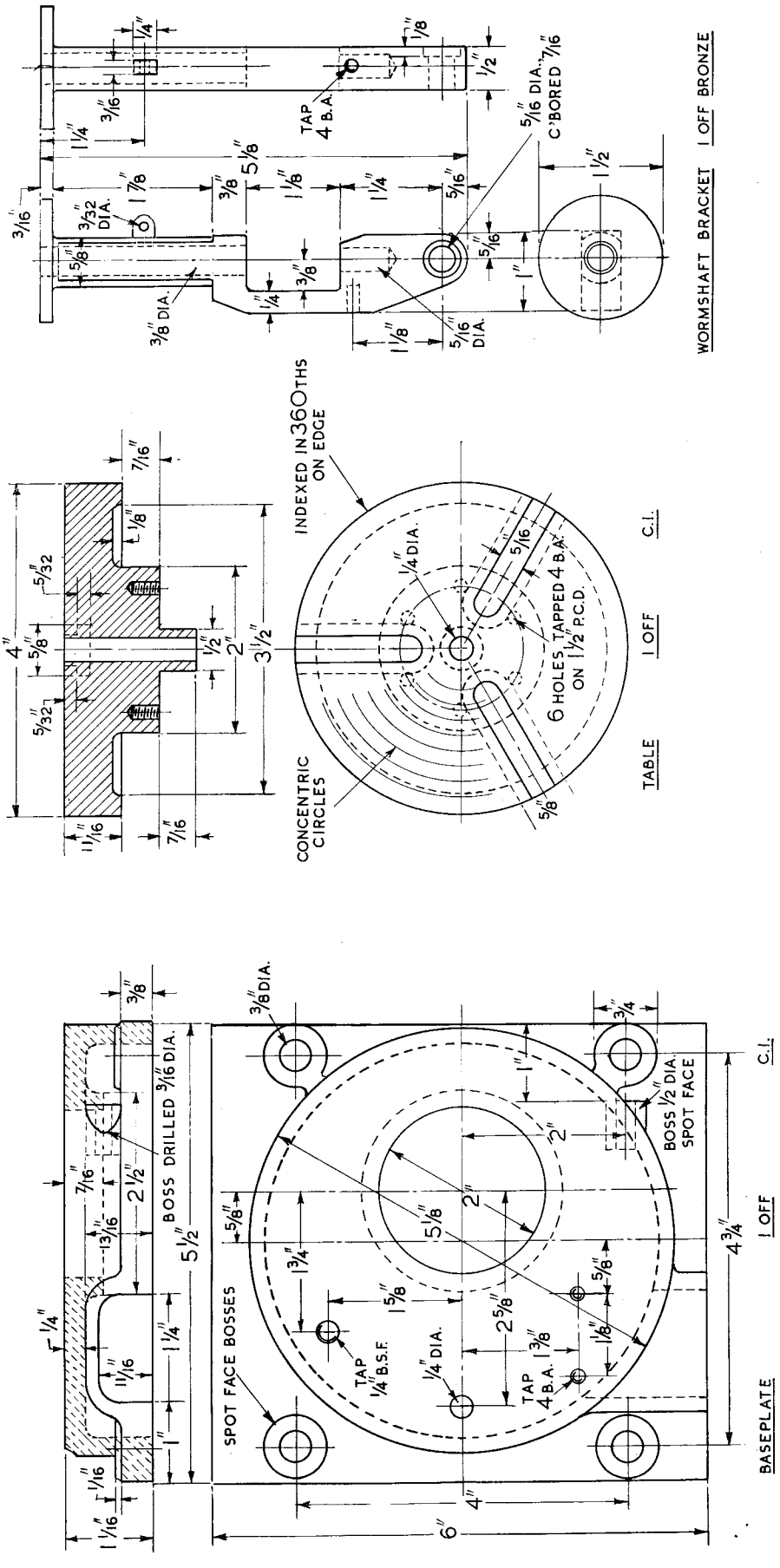

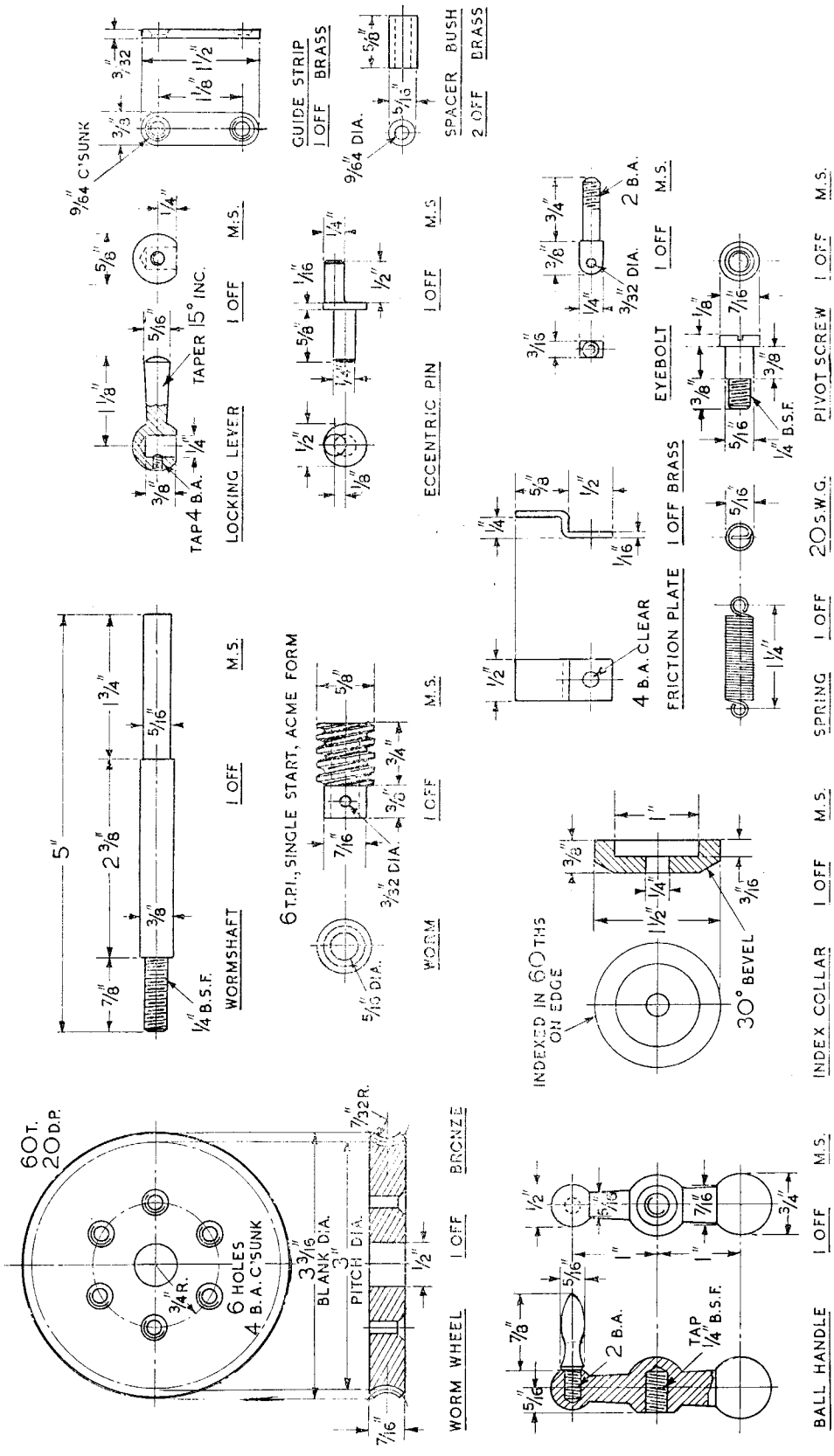

any stresses. One of the objects of mounting the wheel in this way is to prevent any tendency for it to be forced out of truth; this is not easy to achieve with the more common methods of hub mounting.

If a worm wheel must be made, the teeth may be gashed with an involute cutter of appropriate d.p. and size number to about two-thirds of their full depth, before the hobbing. The most accurate indexing of the teeth is essential, as the worm wheel itself is required to serve as an indexing device. Correct tooth form on a worm wheel can be produced only by a hob which is to all intents and purposes a replica, in both pitch and diameter, of the worm with which it will engage. But for our purpose, the worm wheel does not have to be throated—to have concave teeth which partly embrace the worm—though this gives the maximum area of tooth contact, and therefore a long working life. Worm wheels for indexing often have a flat crown, with the teeth cut to full depth only in the centre, or spiral-hobbed parallel to the axis like a skew gear.

Worm and wheel in the original table are of fine pitch. The ratio is 120 : 1. The wheel was produced by a positively-driven hobbing attachment originally made for the steep-angle gearing of the locomotive *1831*, described many years ago. A coarser table movement might be considered a retrogression; but apart from the difficulty of obtaining a pair giving a ratio finer than 60 : 1, the more robust gearing will give fine enough adjustment for all normal purposes. and is less tedious to manipulate when it is used for milling circular or accurate work-pieces. The torque load on the gearing always tends to throw the worm out of mesh, whether the teeth are coarse or fine, but the coarse are likely to be better in resisting wear or shock. A 60 : 1 gear, of course, gives six degrees of table movement for each revolution of the worm; a convenient alternative would be 72 : 1 ratio, giving five degrees per revolution.

With the gearing specified, and an index collar graduated in 60ths, increments of one-tenth of a degree can be directly read against a fixed mark on the flange of the bracket. Finer adjustments could be read with a vernier scale on the flange if desired, but to be of reliable accuracy

Continued on page 615

and construction of workshop tools and equipment; readers' descriptions of their own workshops (once a regular feature) and articles on prize-winning models with the descriptions of the methods used and the ways of reproducing details—more particularly on the locomotive side as the ship modellers have just had a wonderful serial by Oliver Smith on the *Cranborne*.

Stockport,
Cheshire.

D. BOOTH.

Sir Douglas

SIR,—The name of the Denby Dale Fowler engine No 15732 is *Sir Douglas*. The engine was formerly owned by M. Young of Lancaster. It began life as a roller of 5 n.h.p. Its smart conversion to a traction may account for the Aveling front wheels.

Whitby,
Yorkshire.

P. CALVERT.

LIGHT VERTICAL MILLING MACHINE *Continued from page* 606

they would call for extremely high precision of all working parts. A vernier scale on the top surface of the baseplate, to read against the graduated table edge, would be of more practical use, being unaffected by gearing errors.

A ball handle and index of the kind specified for the feed screws of the milling machine may be fitted to the worm-shaft, but a much simpler arrangement is quite adequate, as the index need not be shifted once its position has been set. The fitting shown is similar to the one commonly employed for the indices of lathe feed screws. A plain nut is screwed on to the end of the wormshaft and adjusted to take up end-play. While a standard nut, if accurately machined on both faces, may be suitable, it is better to make a larger nut, fitting the thread rather stiffly, in this position. The index collar is then put in place, preferably with a shakeproof or other thin locking washer in the recess, and the ball handle is screwed on and locked tightly against it. All this can be done before the wormshaft bracket has been assembled in the baseplate.

Methods of shaping ball handles were described earlier. Those who do not wish to undertake this work can get ready-made ball handles as lathe spares. If preferred, a handwheel incorporating a larger diameter index, or other form of handle, may be fitted.

The locking and disengaging of the worm gear is controlled by an eccentric pin and lever, both machined from mild steel. To make the pin, a piece of $\frac{1}{2}$ in. dia. bar long enough to provide chucking grip is faced on the end, and marked out $\frac{1}{8}$ in. off centre. After being offset to this extent, either in the four-jaw chuck or on a V angle plate, it is turned to $\frac{1}{4}$ in. dia. for a length of $\frac{1}{2}$ in. You can then turn the concentric part by holding the spare length of bar in the three-jaw chuck, before parting off at the required length.

A piece of $\frac{5}{8}$ in. bar is used for the lever. Turn the ball end roughly to shape and finish it with a hand tool, using a $\frac{5}{16}$ in. radius gauge for guidance in producing the correct form. The tapped hole in the end should not be drilled at this stage, but it may be started with a small centre-drill to provide concentric location. Then the taper shank can be turned to size and parted off; you can round it off on the end by holding the ball end in the chuck. To drill and face the ball at right angles, it may be held crosswise in the four-jaw chuck, with its axis parallel to the chuck face or, if anything, set slightly inwards at the shank end. The blind hole cannot be reamed, though a D-bit could be used to produce a true parallel hole, a good fit for the top end of the eccentric pin. After the pin has been fitted through the hole in the baseplate, and the lever has been placed in position, eliminating end play, it is secured by a 4 BA grub screw with its point sunk well into it.

To provide positive disengagement of the gearing, through the action of the eccentric pin, you can slot the bracket to take the pin, but the arrangement shown, besides being simpler, applies frictional pressure to the pin, preventing inadvertent movement in either the engaged or disengaged position. The friction plate is simply bent to shape, with a slight inward set, from $\frac{1}{2}$ in. $\times$ $\frac{1}{16}$ in. brass strip. It is held in place by a single 4 BA screw, or two 6 BA screws if you prefer.

The tension spring which normally holds the worm gear in mesh is anchored by a small eyebolt in the baseplate, with a nut on the outside to provide some degree of tension control. For circular traversing of the table, the spring should be strong enough to keep the gearing in mesh, but the locking lever provides more positive control, and when the eccentric pin is near its inward position its cam action locks the worm and wheel to prevent any movement of the table. In the outward position, the pin, acting on the friction plate, withdraws the worm entirely out of mesh, and allows free movement of the table to any position.

When the pivot of the wormshaft bracket is fitted, a collar or thick washer will need to be interposed at its shouldered end, to centralise the shaft axis horizontally with the throat of the worm gear. Some adjustment of the thickness of the collar may be necessary, as the baseplate is not machined inside except for spot facing the holes. The bracket also rests on the guide strip which together with its two spacer bushes, forms a bridge and allows enough swing movement of the bracket for engagement control. As the length of the bushes, and possibly the location of the strip, may vary, the tapping holes for the fixing screws in the baseplate should not be drilled until these parts are ready for fitting.

This rotary table, though relatively simple in construction, is capable of dealing with all operations within its capacity just as efficiently as much more elaborate and expensive fixtures of comparable size. Though designed primarily for use on the light vertical milling machine, it is adaptable to nearly all orthodox milling machines, and certain other machine tools as well. So far as the lathe is concerned, limitations of height between the cross-slide and centres makes it difficult for any form of geared rotary table of reasonable size to be used in the normal horizontal position. But it could be fitted to a large angle bracket, in a vertical position, and employed to cope with many problems in rotary profiling and slotting, offset drilling, and angular spacing of holes.

To be continued

Light vertical MILLING MACHINE

Continued from August 15

by Edgar T. Westbury

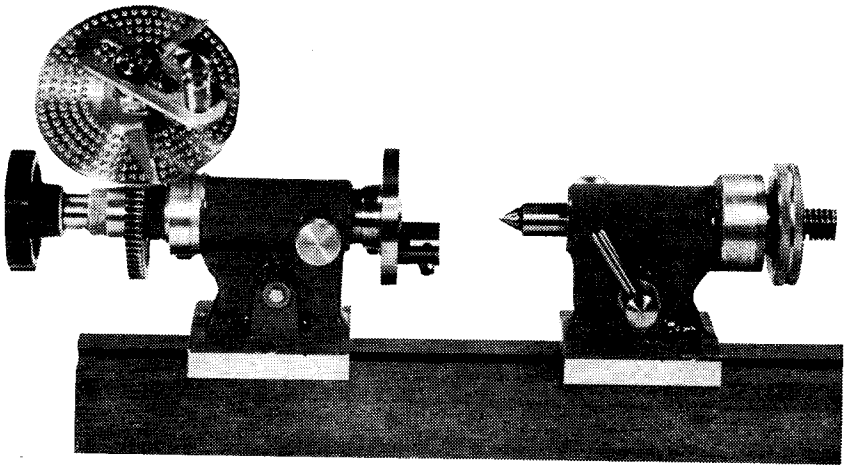

HORIZONTAL DIVIDING HEAD

SOME form of indexing is a necessity in many milling operations, and though the rotary milling table already described can be adapted to indexing about a vertical axis, it is not suitable for dealing with work pieces of any substantial length. A horizontal indexing head has a much wider range of application and can be used in gearcutting, fluting taps, reamers and other cutters, and making long splines or keyways, all of which are commonly encountered in light engineering practice.

The dividing head illustrated (which might be more correctly described as a *pair* of heads), was built to meet definite requirements. It is not claimed to be original, as its basic features conform with standard practice in milling machine equipment. Some of them have also been applied to lathe attachments which have been described at various times in ME. But its details have been arranged to promote simple construction without sacrifice of utility or inherent accuracy. While it is intended principally for use on the vertical milling machine, it is just as well suited to horizontal machines, and could be adapted to serve as a lathe attachment in conjunction with a vertical slide.

The headstock and tailstock are simple castings, though they could easily be made from the solid, or fabricated, if either method is more convenient. They were cast from the same patterns, though the machining details and dimensions differ. The material in the one shown is aluminium alloy, though cast iron would be more in keeping with machine tool practice. But the delay in obtaining small castings in iron, and the greater difficulty in machining this material, influenced me to use light alloy castings. While these are less resistant to hard wear, they are well suited to the light duty of an appliance which involves neither high speed nor sliding friction.

As the machining operations on the two castings are

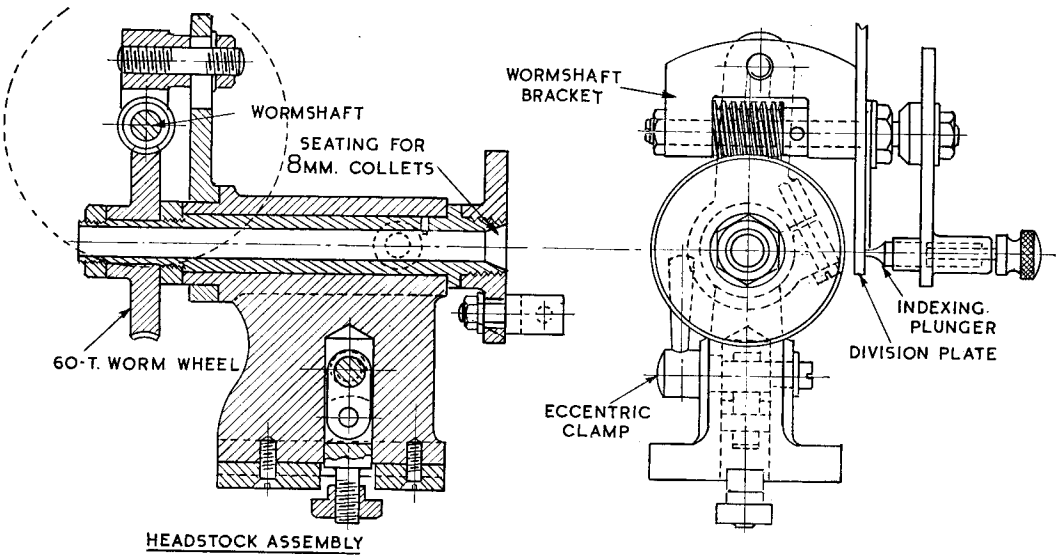

similar, they will be dealt with as a pair. The first task in each case was the boring of the main housing. It was carried out by mounting the casting rear end outwards in the four-jaw chuck, with one of the jaws reversed. If the chuck is not large enough to hold the work comfortably, an alternative method would be to clamp it by its flat base to an angle plate on the faceplate.

The boring operation, in each case, should be carefully carried out to ensure a smooth parallel surface; a reamer may be used for finishing if it does not have to take out more than a few thou. At the same setting the back edge of the base, the shouldered end of the headstock, and the recess in the tailstock boss, can be machined. Mandrels, of the two appropriate sizes, may be used to mount the castings for facing off the front ends, and the front edge of the base, which should be flush.

The underside of the base should be faced off to within $\frac{1}{32}$ in. of finished size. The best way of making sure that this surface is parallel to the axis of the bore is to mount the casting on an angle plate by a bolt through the bore; the machined end surfaces should be protected by thin shims or truly-faced washers. With care in setting-up, and taking measurement from the bore centres, it is possible to finish the base surface at this setting, but for various reasons it is better to do it in a separate operation.

While the height from centre to base is not critical, it is important that both castings be identical in this respect, and also that the bores should be in exact axial alignment. To ensure this, it is well worth while to resort to a simple form of alignment jig. The one I used was very easy to make and consisted of three parts: two angle brackets and a stepped mandrel long enough to take the two castings, nose ends in contact, and a close fit in each of the bores. Each end is turned down to $\frac{3}{8}$ in. dia., and screwed to take a $\frac{3}{8}$ in. BSF nut. The angle brackets are made as an identical pair, with holes to fit the mandrel ends at the same height and at the same distance from the edge; similar holes in the horizontal side of the brackets provide for fixing them to the milling machine table by short T-bolts.

Setting up for milling

The two castings, with the side edges of the base in line, are clamped by the mandrel nuts in an inverted position between the angle brackets. A check should be made to ensure that the mandrel axis is parallel to the edge of the milling table; that is, to the line of table traverse, and also to its horizontal surface. An end or face mill with a fairly broad surface can be used to finish the two base surfaces, with the assurance that they will line up exactly with each other. A side mill can be used to true up the side edges of the bases. Though these do not necessarily play an important part in the use or setting-up of the appliance, they may sometimes be useful for reference if they are parallel to other and more important surfaces.

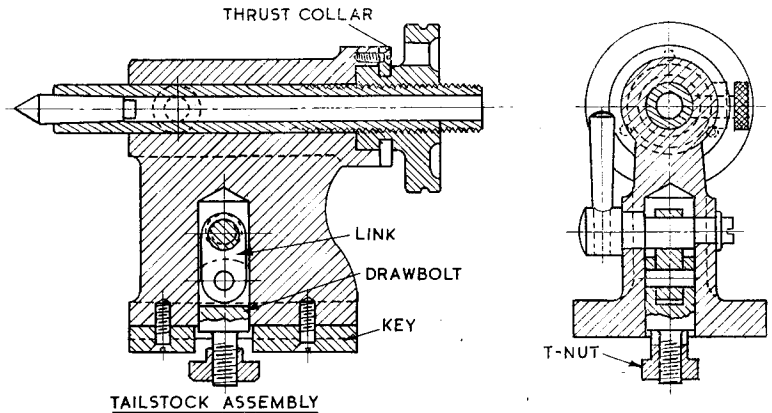

TAILSTOCK ASSEMBLY

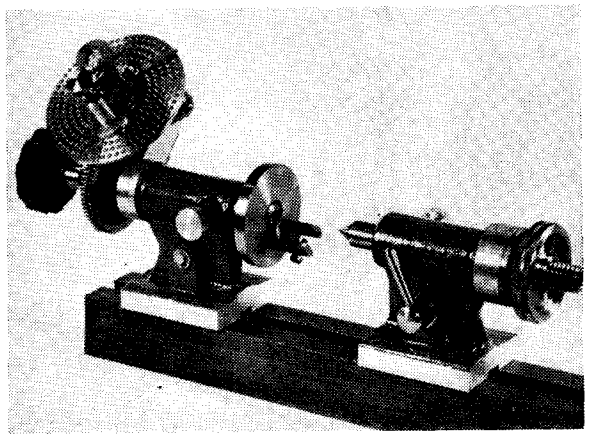

As the dividing head is intended to be mounted and lined up on the milling table by location from a T-slot, some form of a key or tongue to fit the slot should be provided on the base. It would be possible to form this tongue integral with the casting by leaving a projection in the centre. But in my case, I wished to make it suitable for use on machines in which the width of the T-slot might vary, or which had no T-slot. For this reason, the alignment keys were made separate, and fitted to grooves which were end-milled along the centre of the two bases while they were still set up for surface milling.

Positive alignment

In this way, the alignment of the headstock and tailstock with the milling table is assured, not only individually, but as a pair when set up at any distance apart within the length of the table. The keys must be a good fit, not only in the grooves of the base, but also in the table slots. In the event of discrepancy in the widths, stepped or offset keys may need to be (temporarily) fitted; but should it ever be necessary to set the axis of the dividing head at an angle to the table traverse, the best way would be to provide a supplementary swivelling base to mount on the machine table, with slots for attachment of the headstock and tailstock. The base on which the two components were set up for taking the photographs was made from two mild steel bars, $\frac{3}{4}$ in. $\times$ $\frac{3}{8}$ in., with grooves milled in their inner surfaces to anchor the T-nuts, and they were bolted together with $\frac{3}{8}$ in. spacing collars between them. The base can be mounted at any angle on a machine table, or even on the vertical slide of a lathe.

The method of clamping the components to the table is unusual, but it has the merit of being both facile and adaptable, and has proved very satisfactory in use. Similar clamping devices have long been used on instrument lathes for holding down the headstock and tailstock, and for the latter, the principle is often employed on much larger machines. Its

essential features comprise a cross shaft having its centre part eccentric to its main axis, and acting on a drawbolt which fits in a dovetail or T-slot.

Often the drawbolt is made in a single piece, with a certain amount of lateral movement in the casting, and of correct length to pull up tightly in the slot within the vertical range of eccentric travel. But this was difficult to arrange in a device intended to operate in slots of different depths, and for this reason the drawbolt is fitted with a T-nut, which allows it to be adjusted to suit the slot before sliding the component into position.

Other methods of clamping may be adopted at the option of the constructor. The simplest and most obvious would be to cut an aperture in the web of the casting and fit a simple T-bolt with a nut at the top. But this is liable to weaken the structure of the casting, and unless the base is lengthened, it is very difficult to make the nut readily accessible for tightening. Another way would be to make the base with a flange wide enough at one or both sides to take a holding-down bolt, but this is not very neat, and involves offset bearing thrust, which is not the best possible fixing where accurate alignment is essential.

If the eccentric clamping method is adopted, a ½ in. hole must be drilled vertically in the casting to take the drawbolt. This can be done in the vertical milling machine, while the two components are set up on the jig; or alternatively, they may be set up singly on an angle plate in the lathe.

The horizontal hole is drilled diametrically across this bore, ¼ in. dia. at one side and opened up to ⅜ in. at the other as shown. Spot facing at both sides of the hole is not absolutely essential, but is desirable for neatness. The final operation (other than the tapping of holes which can be located from other parts) is the drilling and tapping of a hole in the side boss of each component to take the friction screw. Note that the large end of the cross hole for the eccentric shaft should be on the *opposite* side to this screw, to avoid risk of the two movements fouling each other.

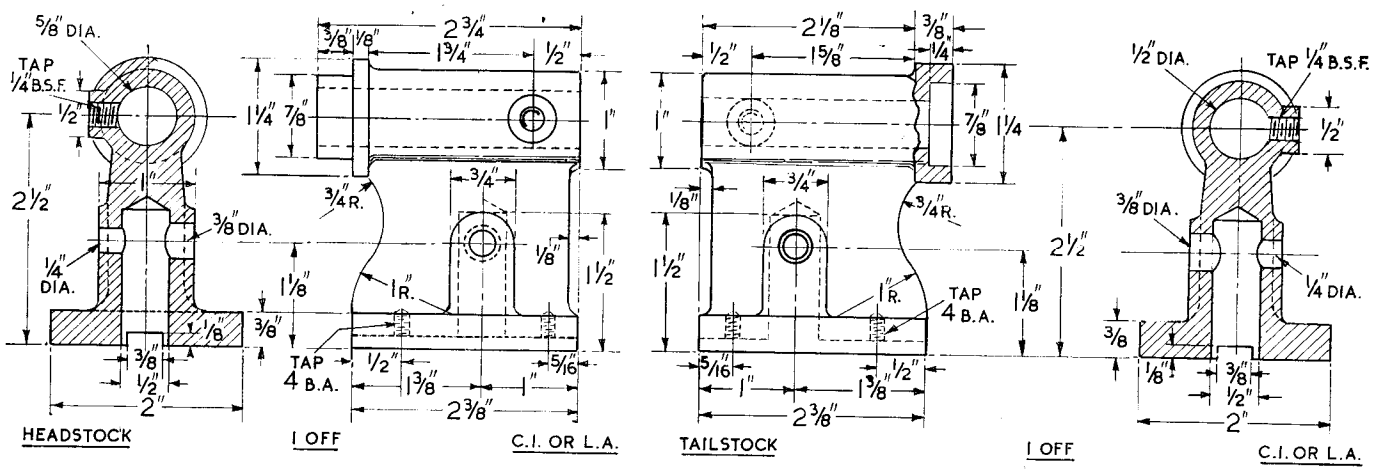

Working components

The headstock mandrel is a straightforward turning job; most of the machining on it can be done between centres, either before or after drilling through the centre. I prefer to get the drilling over, just in case the long hole may run slightly out of truth, and then locate from the bore on true-running centre plugs. If the drilling is done last, the mandrel should be chucked truly at the tail end, and supported immediately behind the nose collar, in a split bush mounted in the three-jaw steady. Running directly in the jaws of the steady involves a risk of scoring the machined surface, even when it is kept well lubricated.

The mandrel, as shown, is bored to take standard 8 mm. split collets, as used on instrument lathes, and obtainable through the tool trade. Articles on making collets have been published in ME on more than one occasion, and full details of their dimensions can be found in the *ME Handbook*. I have made many of these, and other types of collets, when the standard article was not obtainable, and have not found it difficult. The seating angle for the collets in the nose of the mandrel is 40 deg. inclusive; i.e. 20 deg. on the swivelling topslide of the lathe. It should be machined carefully, with a small boring tool set exactly to centre height, and with a smooth tool finish—not by lapping to a standard collet.

The bore dimension of 8 mm. is equivalent to 0.315 in., or about 2½ thou over 5/16 in. A hole first drilled undersize (¼ in. or 17/64 in.) and followed by a 5/16 in. drill may be finished with an 8 mm. standard reamer, or if this is not to hand, it is not a difficult matter to make a D-bit from 8 mm. silver steel rod. In fact, this is really a better tool, because of the inherent ability of a D-bit to produce a straight and true hole.

Deep drilling operations of any kind demand a well-sharpened drill, with plenty of lubrication, and frequent backing-out to clean chips. The lathe may be run at maximum speed (usually from 600 to 750 r.p.m.) for holes in this size range, and the feed rate fairly rapid, but not forced. Holes should always be started with a centre drill and checked for truth in the initial stages of penetration. I mention this because some readers have reported difficulties in drilling true holes, and the deeper a hole is, the greater is the final error if it is not started concentrically.

It is usual to key the shank of the collet by a peg driven into the mandrel behind the nose collar. This provision is not absolutely necessary for normal torque loading, and some operators prefer to dispense with it, relying on the frictional grip of the taper seating to drive the work. For most indexing operations, there is very little torque tending to displace the work from its set position, but as the keyway is provided in standard collets, very little work is entailed in fitting the peg in the mandrel.

The engaging end of the key is 2 mm. or slightly under 0.080 in., and it should not penetrate into the bore of the mandrel deep enough to bottom in the keyway of the collet, as this would tend to force it out of truth.

To be continued

Continued from September 1

LAST STAGES: making the components of the dividing head

by Edgar T. Westbury

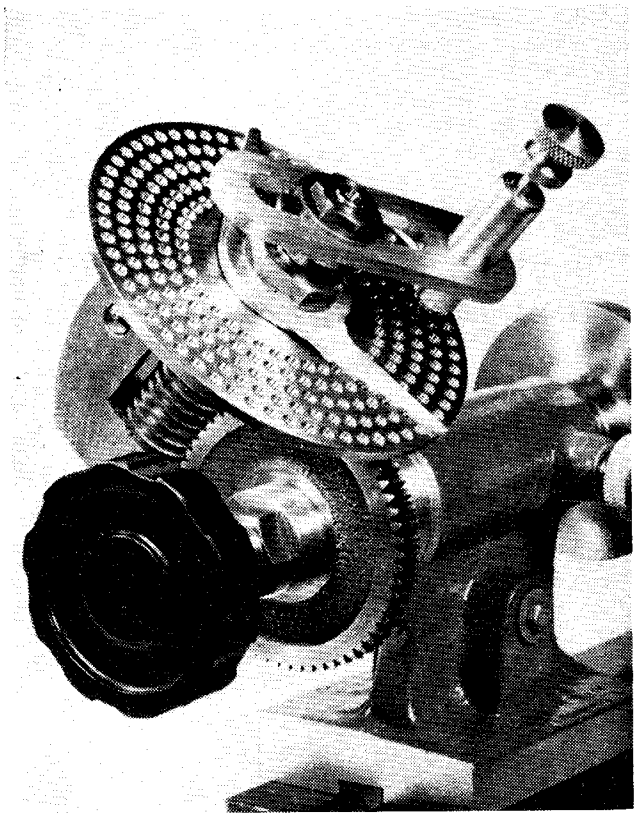

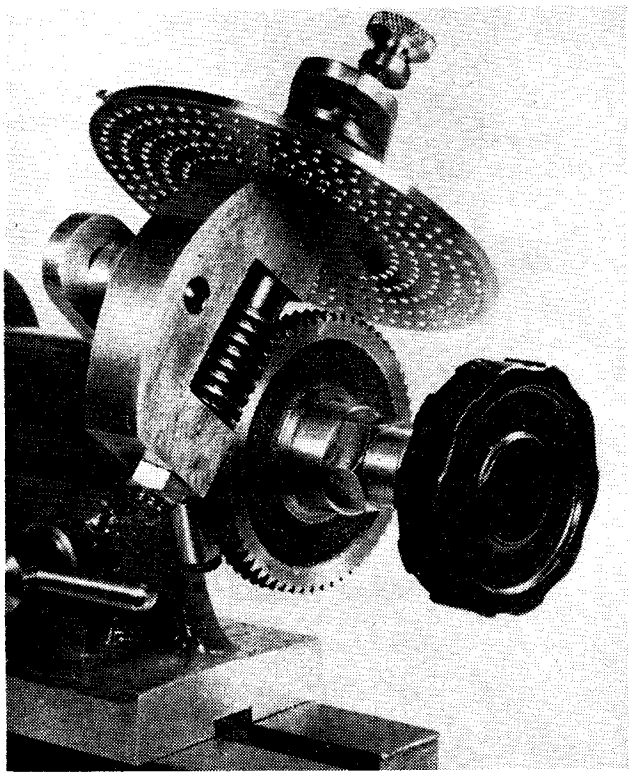

Headstock with division plate sectors and indexing arm (top) and the rear view, with the worm gearing

SOME may prefer to bore the mandrel to No 0 Morse taper to take a standard centre; they should exercise great care to preserve accuracy in the boring of the socket. Similarly, the screwed mandrel nose, to take a catchplate or even a chuck, is an optional fitting, but its usefulness is beyond question. The nose thread (and preferably the other threads as well) should be screwcut, and the register, and the front face of the collar, turned smooth and true. As the bearing of the mandrel is not provided with any means of taking up play—which should not be necessary in a fitting not subject to running wear—the mandrel must obviously be made to a close initial fit. A superfine Swiss file, or better still a ring lap, may be used to fit it to a fine clearance, but it should not be lapped into its bearing.

The fine thread immediately behind the bearing surface is given either a hexagonal or circular nut, which is adjusted to take up end-play. Adjacent to this, the mandrel is turned down to $\frac{7}{16}$ in. to fit the bore of the worm gear, and a further fine thread is cut on the extreme end, and provided with another nut. In clamping the worm gear endwise, this nut locks the first nut after it has been adjusted. Both must be faced parallel and true with the threads. The pitch specified, 26 t.p.i. in the two diameters, conforms to British brass and copper pipe standard. If you do not have taps and dies to suit, a different pitch may be preferred, such as 24 t.p.i. which is easier for screwcutting, as it is a multiple of 8 t.p.i., now generally employed for the leadscrews of small lathes. But a fairly fine pitch thread makes for accuracy and ease of adjustment, and I do not recommend anything much coarser.

The tailstock barrel, on which the operations may follow a similar sequence, can be made from a piece of standard $\frac{1}{2}$ in. bright mild steel rod provided that this fits the bore of the casting, and that it is set up dead true for centring, drilling and later operations. The taper boring of the socket, to an included angle of very slightly under three degrees (0.625 in. per ft), calls for the use of a long boring tool

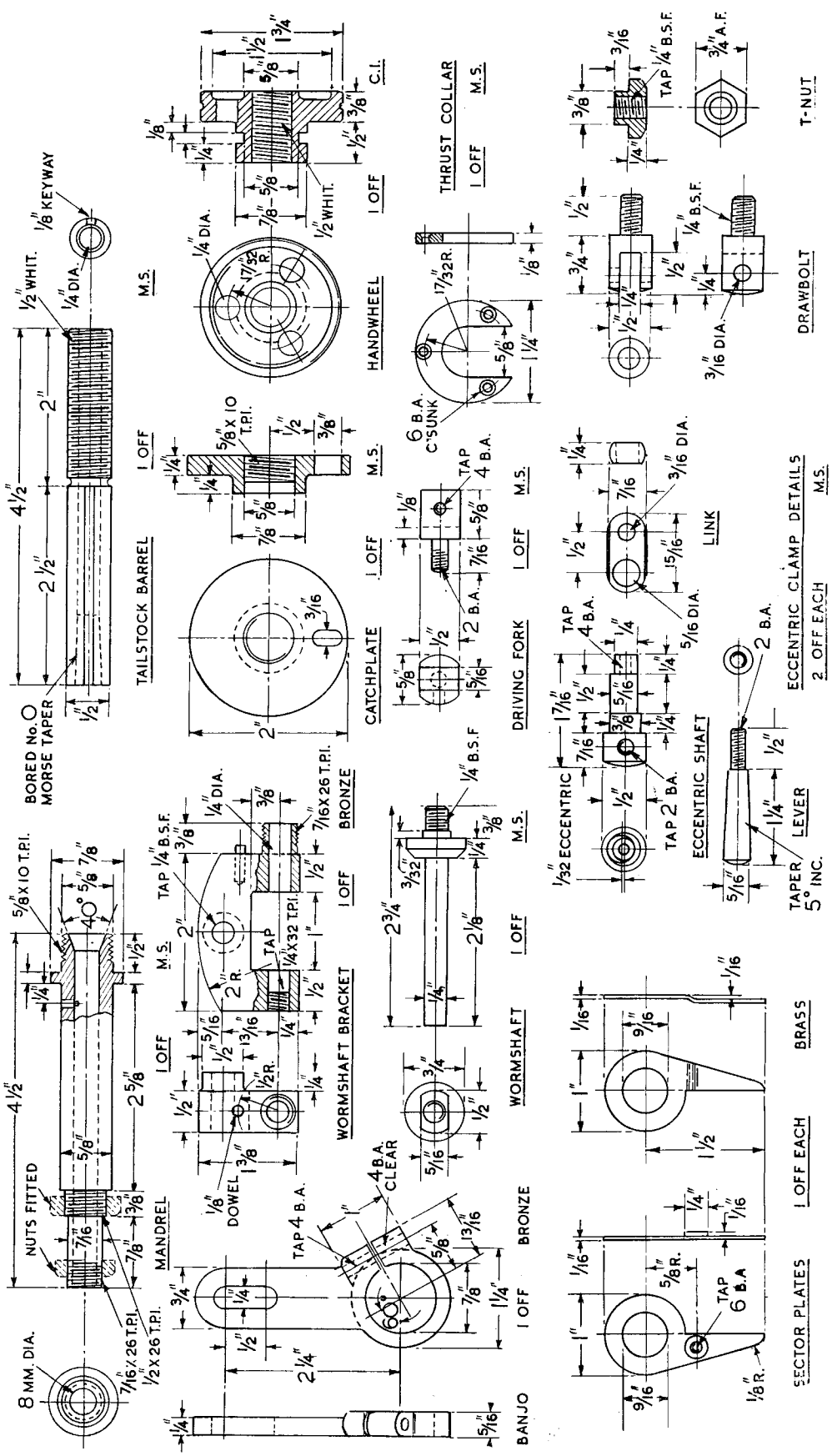

of such a small diameter that its rigidity can never be all that is desired. If you are able to use a reamer for finishing the taper, it will make things easier. The barrel may be located from the bore, as for the mandrel, for cutting the external thread and carrying out any other operations.

I strongly advise you to screwcut the Whitworth standard thread, though you may use a good die nut for finishing it. If dies are relied upon for cutting the thread, there is a risk of a pitch error which may cause it to jam when engaged with a deep thread, such as that of the tailstock handwheel. To simplify the run-out of the thread at the left-hand end, a groove may be cut in the barrel as shown; it should not be cut with a square-ended tool, as sharp internal corners tend to weaken the barrel at its point of minimum cross section. To feed the barrel forward by right-hand rotation of the handwheel you should use a left-hand thread; but in view of the added difficulty of cutting the external and internal threads, this matter will not generally be considered of any great importance.

Finally, a keyway needs to be cut along the plain part of the barrel to keep it from rotating when in use. This may be done by either side or end milling, as may be more convenient. I used a $\frac{1}{8}$ in. Woodruff cutter, set to the centre height of the barrel, which was clamped in a pair of V-blocks on the milling machine table.

The tailstock handwheel should be made of cast iron for preference, as this has good wearing properties for both the internal thread and the thrust faces. Hold it over the rim for turning the boss and boring the centre hole. Screwcutting is recommended for producing the thread, though you may use taps if care is taken to obtain axial and concentric truth.

You can carry out the remaining operations by mounting the casting on a screwed stub mandrel. These operations include grooving the boss, facing and recessing the back, and turning the outer rim, which should be knurled or serrated to provide a hand grip. One hole at least must be drilled through the disc, to provide access to the screws in the thrust collar. Three holes are better, allowing all three screws to be manipulated at one handwheel position.

The collar is simply a steel disc faced parallel on the two sides to fit neatly in the handwheel groove, and cut out as shown so that it can be assembled. After the screw holes have been drilled and countersunk, it may with advantage be case-hardened. In marking or spotting the holes in the tailstock casting for attaching the thrust collar, make certain that it is correctly aligned, so that the handwheel works freely on both the thread and the thrust bearing.

Either cast iron or mild steel may be used for the catchplate, the machining of which follows much the same sequence as with the handwheel. Although the accuracy of this part is not so critical as that of a lathe faceplate, care in screwcutting and boring the register is well worth while. As the work must be coupled positively to the catchplate, without backlash, the ordinary driving pin is replaced by a fork with a side screw to grip the carrier; or a special forked carrier, which provides the same facility, can be employed. These fittings are, of course, used only for work which is mounted between centres; for many jobs, you will find it more convenient and efficient to hold the shank or arbor in a split collet, and remove the catchplate to provide more room for the run of the cutter.

The fittings for the headstock include the banjo and the wormshaft bracket, both of which can be made from bronze or gunmetal castings. Machining is simple for both parts; the banjo should be bored and faced on the boss to fit on the seating of the headstock. After drilling and tapping for the clamp screw, split it through the centre of the lug, and clean up and slot the front end by filing or milling. You may set up the bracket in the four-jaw chuck for drilling, tapping and facing the mounting boss; then you can mount it on an angle plate for drilling the bearing, facing one end, and turning and threading the seating for the division plate. At the other end, the hole is reduced to tapping size, and threaded to take an end play adjusting screw, with lock nut. The inner end of the main bearing must be spot faced or otherwise machined, to form a thrust seating for the boss of the worm.

To avoid the need for turning the wormshaft down from ¾ in. dia., you may use a piece of ¼ in. ground steel rod, with the flange screwed on tightly and machined in place. Flats on the front of the flange form a key to locate the slotted indexing arm, which is clamped to it by a nut and washer.

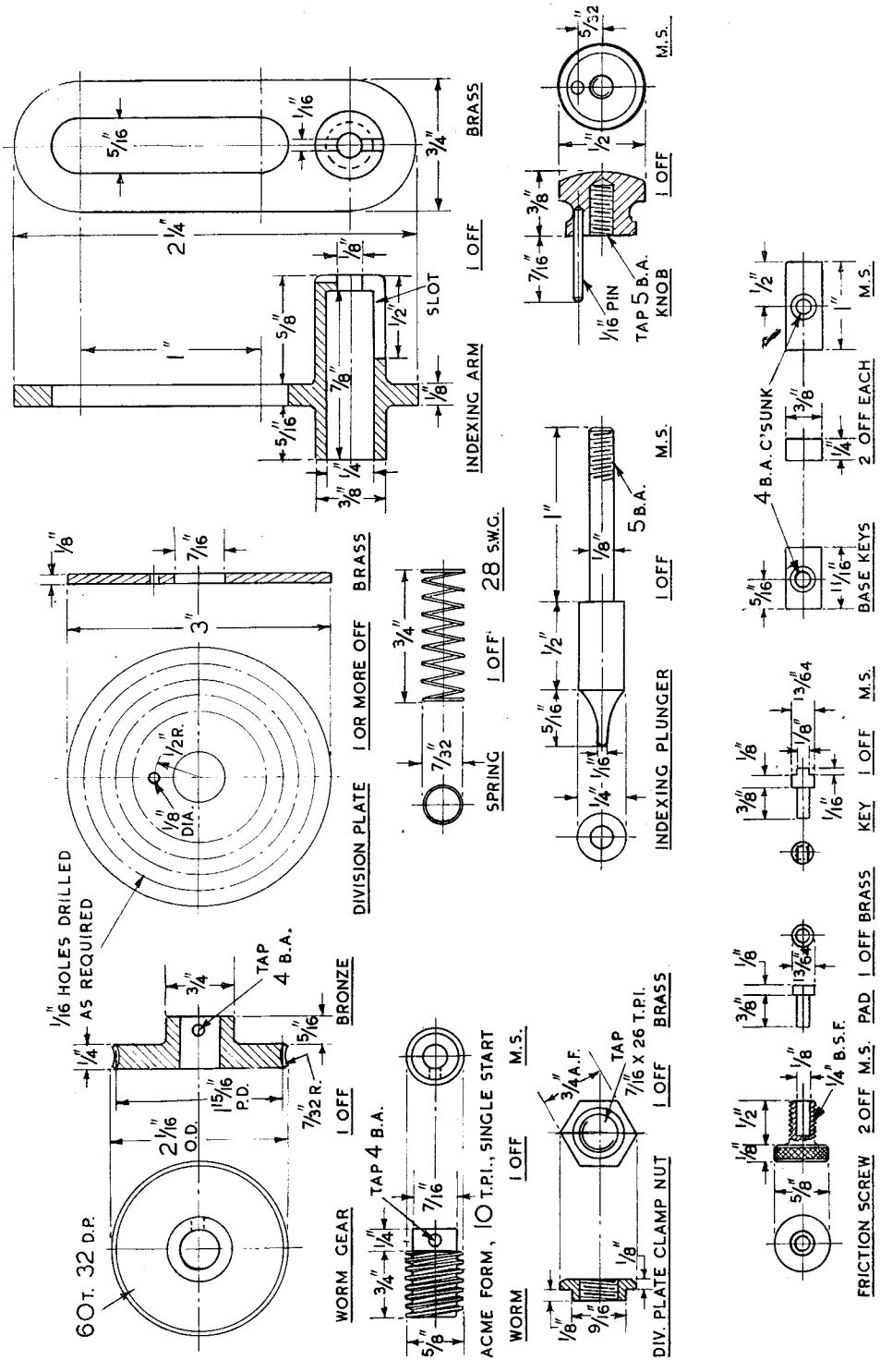

After the worm has been fitted to the shaft, it may be fixed either by a taper pin or by a socketed screw sunk well into the shaft surface.

To prevent inadvertent movement of the headstock mandrel and the tailstock barrel, simple friction screws with knurled heads are used. They are drilled centrally ⅛ in. dia. to form sockets which receive the shank of a brass pad and a flat key. The pad eliminates any risk that the mandrel surface will be bruised, and the key prevents the barrel from

rotating, besides serving to clamp it endwise when required.

Make the keys to fit the base of each casting from short pieces of $\frac{3}{8}$ in. $\times$ $\frac{1}{4}$ in. rectangular mild steel. They must be a good fit both in the machined grooves of the base and the T-slots of the machine table. After drilling the holes for the fixing screws, put the keys in place to spot the tapping holes in the base.

The components for the clamps of both the headstock and tailstock are identical. For the eccentric shaft, a piece of $\frac{1}{2}$ in. mild steel rod may be used. It is held in the chuck with a little over 1 in. projecting. The end is turned down to $\frac{1}{4}$ in. for a length of $\frac{1}{4}$ in., and drilled and tapped for the retaining screw, and then a further length of $\frac{3}{4}$ in. is turned to $\frac{3}{8}$ in. dia. You may repeat this procedure on the other end of the rod, or on a second piece, before you set it over about $\frac{1}{32}$ in. in the four-jaw chuck to turn the eccentric part to $\frac{5}{16}$ in. dia. Before parting off and rounding the head, drill and tap the cross hole, at right angles to the plane of the eccentric throw. The lever, turned to the shape shown, is permanently screwed into this hole in the most convenient position.

Drawbolt and link

Steel rod of the same size can be used to make the drawbolt. Instead of turning the screwed end first, you will find it easier to face and round off the other end, from a piece of substantial length, and hold it in the lathe toolpost for milling the slot. A $\frac{1}{4}$ in. hole may be drilled in the centre to reduce the amount of metal which has to be milled away. You may drill the crosshole as well, so that its squareness in relation to the slot can be checked by a piece of $\frac{3}{16}$ in. rod when it is set up for milling. The piece may then be cut off to a total length of $1\frac{1}{4}$ in., and chucked for turning down and screwing.

The link is made from rectangular steel bar, $\frac{7}{16}$ in. $\times$ $\frac{1}{4}$ in., rounded off on the sides to give clearance in the vertical hole in the casting, and drilled as shown. A piece of $\frac{3}{16}$ in. steel rod, inserted through the link and drawbolt and filed flush at the ends, forms the pivot. You may think that the T-nut should be made square; but hexagonal nuts have been used, to give six positions of adjustment instead of only four. When the clamps have been assembled in their castings, the eccentric shafts are kept in place by a large washer and an end screw in each.

I give the details of the worm and worm wheel in case you decide to make them yourself though, as I have explained, they can be obtained ready-made from Bonds o' Euston Road. The blank dimensions of the worm wheel are only approximate, as the final form and diameter of the throat are produced in the hobbing operation. Methods of generating worm gears accurately have been described in ME. The worm gear may be keyed or secured by a sunk grub screw to the mandrel after the nuts on both sides of it have been properly adjusted.

One or more plain circular brass blanks may be used for the division plates, or they may be trepanned from $\frac{1}{8}$ in. brass sheet. If the metal is reasonably flat, they require no more than to be drilled truly through the centre to fit the bracket seating closely, and to be trimmed on the outer edge. A $\frac{1}{8}$ in. hole is drilled at a radius of $\frac{1}{2}$ in. to fit a dowel in the face of the wormshaft bracket. There is room for up to five rows of holes in the 3 in. plate, and the number of holes in each circle should be determined according to requirements. Methods of drilling division plates of sufficient accuracy for most purposes are fully described in the PM handbook *Milling in the Lathe.*

The division plate on the appliance illustrated has five rows of holes, copied from lathe change wheels, and having 65, 60, 55, 50, 45 and 40 holes. I used a high-speed drilling spindle, with a $\frac{1}{16}$ in. centre drill, and fitted an end stop to limit the depth of each hole so that it was slightly countersunk for easy engagement of the index plunger. It was not a tedious operation to drill the 315 holes in the plate: the drilling time was only five seconds a hole, and indexing the mandrel between holes occupied about the same time. This range of holes will cover most ordinary requirements, with multiples of prime numbers up to 13, with the exception of 7. Special divisions not covered can be dealt with when they arise.

The indexing arm, with its associated parts, is shown in an enlarged scale to clarify details; the arm may be fabricated from brass, by silver-soldering the boss into a flat strip after partial machining of both parts. A D-bit should be used to finish the bore of the boss smooth and parallel, as an ordinary reamer produces a tapered hole. The plunger should be a close fit but quite free, and its location endwise should be checked so that it engages the holes in the plate when the knob is screwed on, but can be retracted at least $\frac{1}{8}$ in. clear of the plate when the spring is in position.

For the plunger to be held out of action when required, the knob has a $\frac{1}{16}$ in. pin screwed or pressed into its front face. A slot in the boss of the indexing arm allows the pin to travel far enough for engagement of the plunger, but when the knob is turned 180 degrees, it fits a shallow groove—a mere notch, in fact—which holds the plunger back. Both the slot and the groove can be milled at one setting by a $\frac{1}{16}$ in. Woodruff cutter, with the flat part of the arm clamped to a vertical fixture, or in the machine vice of the milling machine.

The sector plates for the counting of holes in the division plate are cut from $\frac{1}{16}$ in. brass sheet and are identical except that one is cranked so that its arm lies flush with that of the other when laid on top of it. A $\frac{1}{4}$ in. boss is riveted or silver-soldered into the second plate, and drilled and tapped 6 BA to take a screw and washer. The clamp nut which holds the division plate is turned at the back to fit the bore of the sector plate, which are both free to rotate on it, but can be clamped together by the edge of the washer when the 6 BA screw is tightened. If necessary, the thickness of the tapped boss may be adjusted, or the washer slightly dished, so that it locks the plates together firmly. In use, the sectors are set so as to allow the required angular movement of the index pin for each shift of the arm (the number of holes in the plate, plus one).

Accessories as required

This dividing head is the most elaborate accessory that I have fitted to the vertical milling machine, or that I am likely to fit so far as can be foreseen. Not every constructor of the machine will need a dividing head, as so many useful operations besides dividing can be carried out on it. But for my purposes the dividing head has been well worth the making, and the ability to adapt it to other machines is a further advantage. Some may prefer to make a simplified form of the appliance, with plain indexing, and a less elaborate tailstock or none at all. I am not a believer in making gadgets for gadgets' sake, but I never grudge the time taken to make them if they are likely to save time, or improve ease or accuracy of the work.

I could suggest several other fixtures and accessories which

Continued on page 804

LUBRICATOR . . . *from page 790*

adjusting screw itself *D* passes through the tapped bearing *C*, and through the pivot *E*, with washers on each side, and a nut which is soldered to the screw after assembly. It can be made to raise or lower the main shaft as required.

As the main shaft is moved up or down, it does not travel exactly in a vertical plane, but has a radial motion. The slots cut in the sides of the tank must therefore be slightly radiused to match.

A further point arises. If the tank were filled with oil above the level of the bottom of these curved slots, the oil would of course leak out and would make rather a mess on the footplate. An overflow pipe is therefore fitted, so that if the driver is over-enthusiastic with the oilcan the excess will pass harmlessly down between the wheels.

Plunger and cylinder are conventional, except that the spring which bears on the first non-return valve ball is contained in a cup-shaped component so that the spring itself does not touch the ball. The ball seats on a separate turning, to ensure a true seat. We must make the turning a tight fit in its passage; if it worked loose, we should be in real trouble, as the pressure of the oil would force it away from the cylinder, with the ball, spring and so forth, and no oil would be fed to the engine. Those who doubt their ability to get it in tightly enough without distorting it would be well advised to leave it out. The lubricator will work quite well without it if the normal seating for the ball is done with care.

The lubricator shown in my pictures was made for me by Severn-Lamb Ltd, of Stratford-upon-Avon, the well-known professional modellers. They have made an excellent job of it. It will pump with ease oil at up to 600 lb. per sq. in.—enough for most small engines !

A full-size drawing of the new mechanical lubricator is now obtainable. (Ref. No LO. 44. Price 2s. 6d.)

MILLING MACHINE . . . *from page 799*

could be fitted to the machine, but they are refinements rather than essentials. It has been suggested that self-acting feed might be provided for the table and possibly the cross slide as well. But this would involve complications which are of limited value on a jobbing machine. Positive locking devices for both slide movements could be simply added, and are worth while; and so are longitudinal traverse stops. I shall probably fit them as soon as I can find time. Some positive mechanical means of elevating the complete spindle head with the motor, which is rather heavy to manhandle, would be a great advantage. It is not difficult to fit either a mechanical or hydraulic jack inside the main column, but it must not interfere with the sliding and swivelling movement of the cross member.

Some readers have asked what limits of accuracy can be expected in work carried out on the machine. The answer is simple; like any other job in the workshop, this machine is as accurate as you make it, and I have no doubt that individually built machines will vary widely in their quality. But it should be possible to build the machine so that it is at least as accurate as other machine tools in the range normally open to model engineers. I know that many readers, not only in Britain but also in remote corners of the earth, have been sufficiently impressed by the design to make the machine, and I am sure that they will not be disappointed with it. ▣

The First Savannah

Continued from page 802

more heartily as she flies the American flag." But there were, as always, some Britons whose envy of American achievement made their response less than warm. While the Admiralty graciously waived all port charges at Liverpool, a young idiot of a lieutenant ordered Captain Rogers to haul down the coachwhip pennant flying at his mainmast head. After exchanging the pennant for the larger one flown by squadron commanders in the United States Navy, the captain called out an order to his crew: "Get the hot water engine ready !" This secret weapon, though it did not in fact exist, proved the ultimate deterrent: the lieutenant and his party were soon pulling away in terror of being scalded to death.

There were also responsible people who wondered if the voyage itself had a secret purpose. Some believed that the *Savannah* was on her way to Russia as a present from the United States; others suspected that Moses Rogers hoped to rescue Napoleon from St Helena. They were still wondering when the Elegant Steamship put out again for the Baltic.

Of her visits to Stockholm, Kronstadt and St. Petersburg, of her trip to Copenhagen and Arendal and the long voyage home, I will leave you to read in Mr. Braynard's book. She had been hailed everywhere as a triumph: the Czar had even invited Moses Rogers and his steamer to remain in Russian waters. Yet the end was failure: the steamship which Europe had coveted lay unwanted in the Navy Yard at Washington. The unkindest cut of all was the removal of her machinery: she became the kind of vessel that Fickett had built, before Moses Rogers came along with his talk of steam.

At three o'clock in the morning on 5 November 1821 the sailing packet *Savannah* drove on to a sand bank opposite Fire Place on Fire Island, about fifty miles east of Sandy Hook; what the seas have left of her is still there. Some day, perhaps through the efforts of Mr. Braynard, her wreckage may be salvaged. The engine, of course, will not be among it. After the machinery had been removed, the cylinder was used in the Atlantic Iron Works until 1853 and later was shown at the New York Exhibition of the Industry of All Nations (the Crystal Palace Exhibition which burned down).

Like the *Constitution*, the *Savannah* passed through a period of neglect. In time of peril a nation remembers its past, and in particular its history at sea; and so it was that in 1944 the United States issued a stamp commemorating the Elegant Steamship. Honour was again done to her when the United States named the first commercial nuclear vessel after the ship which had introduced steam to the sea-ways of the world.

There is more continuity here than we may at first realise. We cannot read much about the nuclear *Savannah* without encountering an old familiar name, long honoured in the world of steam: Babcock and Wilcox. The American Babcock and Wilcox Company designed and built the pressurised water reactor for the *Savannah*: its Consolidated Nuclear Steam Generator can be manufactured by the British Company at any time.

In short, the new *Savannah*, like the old, is really a steamship. All the nuclear wonders, all the amazing complexities of controlled chain-reaction, brings us in the end to a form of power that was understood by Hero of Alexandria in the first century. Mankind has found a new way of heating James Watt's legendary kettle. ▣