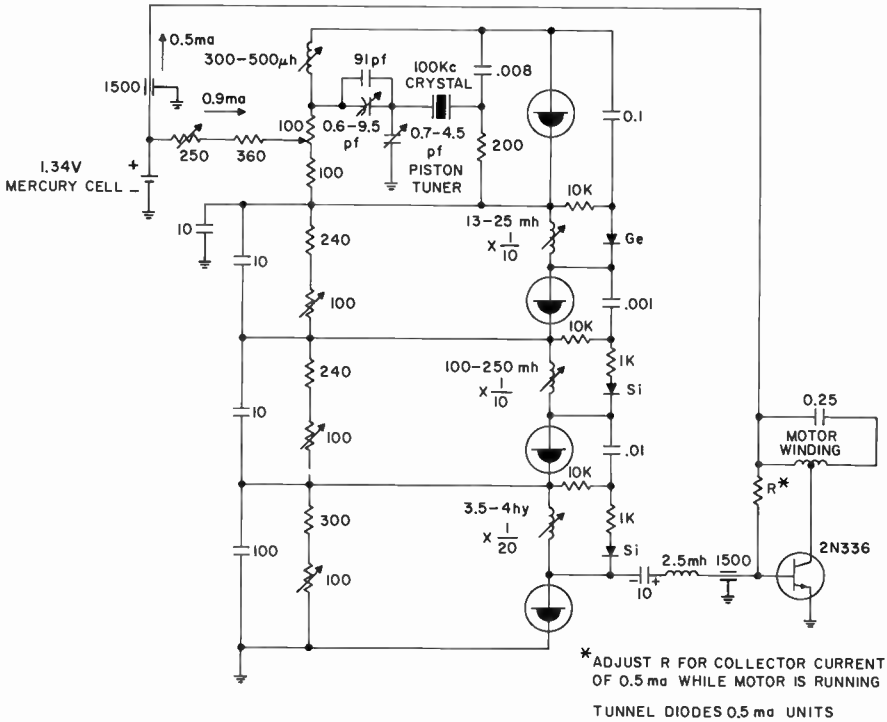

This circuit illustrates an application where the low power consumption, the low voltage requirements, and the excellent frequency stability of crystal controlled tunnel diode oscillators provides the circuit designer with an ideal device for his job. The complete circuit incorporates trimmers that can adjust the timing of the clock by a few seconds per year. Three tunnel diodes give overall division ratio of 2,000 to 1. Figure 14.13 pictures the finished chronometer.

CRYSTAL CONTROLLED CHRONOMETER[6]

Figure 14.12

Figure 14.13 HIGH ACCURACY CHRONOMETER